BIOLOGICAL SYSTEMATICS

PRINCIPLES AND APPLICATIONS

SECOND EDITION

Randall T. Schuh
Andrew V. Z. Brower

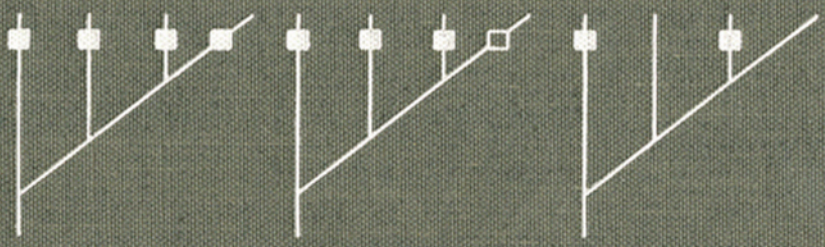

VISIT…

LANZAROTE Caliente.COM

BIOLOGICAL SYSTEMATICS

BIOLOGICAL SYSTEMATICS

PRINCIPLES AND APPLICATIONS

Second Edition

Randall T. Schuh

George Willett Curator of Entomology
Division of Invertebrate Zoology, and
Professor, Richard Gilder Graduate School,
American Museum of Natural History, New York, New York, and
Adjunct Professor, Department of Entomology, Cornell University, Ithaca, and
Department of Biology, City College, City University of New York

Andrew V. Z. Brower

Department of Biology, Middle Tennessee State University
Murfreesboro, Tennessee, and
Research Associate, Division of Invertebrate Zoology
American Museum of Natural History, New York, New York, and
Department of Entomology, National Museum of Natural History, Washington, D.C.

Comstock Publishing Associates a division of

Cornell University Press | Ithaca and London

First edition, copyright © 2000 by Cornell University
Second edition, copyright © 2009 by Cornell University

All rights reserved. Except for brief quotations in a review, this book, or parts thereof, must not be reproduced in any form without permission in writing from the publisher. For information, address Cornell University Press, Sage House, 512 East State Street, Ithaca, New York 14850.

Second edition, first published 2009 by Cornell University Press

Printed in the United States of America

Library of Congress Cataloging-in-Publication Data

Schuh, Randall T.
Biological systematics : principles and applications / Randall T. Schuh, Andrew V. Z. Brower. — 2nd ed.
p. cm.
Includes bibliographical references and index.
ISBN 978-0-8014-4799-0 (cloth : alk. paper)
1. Biology—Classification. I. Brower, Andrew V. Z. (Andrew Van Zandt), 1962– II. Title.

QH83.S345 2009
570.1'2—dc22

2009007311

Cornell University Press strives to use environmentally responsible suppliers and materials to the fullest extent possible in the publishing of its books. Such materials include vegetable-based, low-VOC inks and acid-free papers that are recycled, totally chlorine-free, or partly composed of nonwood fibers. For further information, visit our website at www.cornellpress.cornell.edu.

Cloth printing 10 9 8 7 6 5 4 3 2 1

CONTENTS

Preface to the First Edition vii
Preface to the Second Edition ix
Acknowledgments to the First Edition xi
Acknowledgments to the Second Edition xiii

Section I: BACKGROUND FOR THE STUDY OF SYSTEMATICS
Chapter 1 Introduction to Systematics 3
Chapter 2 Systematics and the Philosophy of Science 31

Section II: CLADISTIC METHODS
Chapter 3 Characters and Character States 51
Chapter 4 Character Polarity and Inferring Homology 85
Chapter 5 Tree-Building Algorithms 109
Chapter 6 Evaluating Results 146

Section III: APPLICATION OF CLADISTIC RESULTS
Chapter 7 Nomenclature, Classifications, and Systematic Databases 173
Chapter 8 Historical Biogeography and Host-Parasite Coevolution 209
Chapter 9 Ecology, Adaptation, and Evolutionary Scenarios 230
Chapter 10 Biodiversity and Conservation 243

Appendix: Selecting and Acquiring Software 253
Glossary 257
Literature Cited 271
Author Index 297
Subject Index 301

PREFACE TO THE FIRST EDITION

All fields of science have undergone revolutions, and systematics is no exception. For example, the discovery of DNA structure fundamentally altered our conception of the mechanisms of inheritance. One might assume that the most recent revolution in systematic biology would have come about through the proposal of a coherent theory of organic evolution as the basis for recovering information on the hierarchic relationships observed among organisms. Such was not the case, however, no matter the frequency of such claims. Rather, it was the realization by Willi Hennig—and others—nearly one hundred years after the publication of the *Origin of Species* by Charles Darwin, that homologies are transformed *and* nested, and that phylogenetic relationships can best be discovered through the application of what have subsequently come to be called cladistic methods. The fact that the theory of evolution allowed for the explanation of a hierarchy of descent was seemingly not sufficient to arrive at a method for consistent recovery of genealogical relationships. It can further be argued that neither was it necessary.

The revolutionary changes did not stop there, however. At the same time that the methods of cladistics were changing taxonomic practice on how to recognize natural groupings, the issue of quantification was being discussed with equal fervor. Whereas systematics was long a discipline marked by its strong qualitative aspect, the analysis of phylogenetic relationships is now largely quantitative.

The introduction of quantitative methods to systematics began with the "numerical taxonomists." Their approach to grouping was based on overall similarity concepts, and the attendant assumption of equal rates of evolutionary change across phyletic lines. Establishment of systematic relationships is now dominated by cladistic methods, which form groups on the basis of special similarity and allow for unequal rates of evolutionary change. The logic and application of quantitative cladistics were in large part developed by James S. Farris.

The overall approach of this book is to present a coherent and logically consistent view of systematic theory founded on cladistic methodology and the principle of parsimony. Some of its subject matter is in a style that would commonly be found in research papers, that is, argument and critique. This approach allows material to be presented in its unadulterated form rather than in the abstract, such that

sources of ideas at which criticism is being directed are not obscured and can be found readily in the primary literature. The tradition of critical texts in biological systematics was established by Blackwelder, Crowson, Hennig, Sokal and Sneath, and others. I hope that the style of this book will help students see argumentation in science for what it is, a way of developing knowledge and understanding ideas. The alternative would be to obscure historical fact by pretending that the formulation of a body of critical thought has proceeded in a linear fashion, without sometimes acrimonious debate.

Organization of the Text. This work is divided into three sections, representing more or less logical divisions of the subject matter. Section I, Background for the Study of Systematics, comprises three chapters, which offer, respectively, an introduction to biological systematics, binominal nomenclature, and the philosophy of science as applied to systematics. Section II, Cladistic Methods, outlines the methods of phylogenetic analysis, with chapters on homology and outgroup comparison, character analysis, computer-implemented phylogenetic analysis, and evaluation of phylogenetic results. Section III, Application of Cladistic Results, comprises chapters on the preparation of formal classifications, historical biogeography and coevolution, testing evolutionary scenarios, and biodiversity and conservation. A terminal glossary provides definitions for the specialized terminology of systematics used in this book.

Each chapter ends with lists of Literature Cited and Suggested Readings. The references cited in the text are those actually needed to validate an argument, but do not in all cases necessarily represent the most useful available sources. The Suggested Readings are intended to augment the material presented in the text with more detailed knowledge to challenge the more sophisticated and inquiring student. The readings are chosen for their breadth and quality of coverage, with consideration also being given to their accessibility. Most should be available in major university libraries, and thus be readily available to most students and professors using this book.

R. T. Schuh, 2000

PREFACE TO THE SECOND EDITION

Nearly a decade has passed since the publication of the first edition of *Biological Systematics.* Computers have become faster, phylogenetic data matrices have become larger, and presentation of phylogenetic trees has become commonplace, even in literature outside the traditional realm of systematics. The exponential growth of DNA sequence data production has led to the emergence of the new disciplines of genomics and bioinformatics. During this interval, however, the core principles of systematics—discovery and interpretation of characters, construction of data matrices, search for most parsimonious trees—have remained largely unaltered. Therefore, our revision incorporates philosophical and technical advances of the past ten years, but also elaborates and enhances with additional examples the ideas that have formed the basis of modern systematics since its origins nearly fifty years ago.

Although likelihood-based methods of phylogenetic inference have increased in popularity, perhaps due to their implementation in easy-to-use software packages, our book retains its cladistic emphasis. As we have each found in our respective empirical research on Hemiptera and Lepidoptera, the cladistic approach is the most transparent, flexible, and direct means to interpret patterns of character-state transformation as evidence of hierarchical relationships among taxa. The most vociferous advocates of alternative methods are not biologists, but statisticians and computer programmers. We have been accused of "bias" in our preference for cladistic methods over alternatives, but we think—and endeavor to explain in the book—that our methodological choices are based on a clear and objective understanding of the problem being addressed. Systematics is not just about tree-building algorithms; our book devotes just one of its ten chapters to that aspect of the discipline. It is rather a world view, nothing less than a coherent approach for organizing and understanding information about the natural world. It is with that idea in mind that we have chosen our subject matter and organized our overall presentation.

Reorganization of the Text. We have revised and expanded the entire book, although its overall structure remains largely the same as the first edition. Chapter 1 reviews the history of modern systematics and philosophical differences among

various schools. Chapter 2 addresses philosophical underpinnings. An extensively reorganized discussion of character coding and homology is addressed in Chapters 3 and 4. Chapter 5 covers tree-building methods and offers an expanded discussion and critique of the rationale and methods of maximum likelihood, and Chapter 6 describes methods for assessing support for resultant topologies. The discussion of biological nomenclature has been moved to Chapter 7, and merged with an expanded critique of "phylogenetic nomenclature" and the Phylocode. Chapters 8, 9, and 10 examine applications of cladistic results to biogeography, ecology, and biodiversity, respectively. All of the works cited are listed at the end of the book in a comprehensive Literature Cited section, rather than at the end of individual chapters, as in the first edition. Each chapter is accompanied by a supplementary list of Suggested Readings, which represents a cross-section of classic and recent articles and books intended to provide background and deeper understanding of relevant issues. The glossary of terms at the back of the book has been expanded and revised.

R. T. Schuh and A. V. Z. Brower

ACKNOWLEDGMENTS TO THE FIRST EDITION

Several colleagues and friends provided discussion, assistance, advice, reviews, and encouragement during the course of writing this book. For reviews of an early version of the manuscript, or parts thereof, I thank James Ashe, Gerasimos Cassis, David Lindberg, Steven Keffer, Norman Platnick, James Slater, Christian Thompson, Quentin Wheeler, and Ward Wheeler. For reviews of the complete manuscript, I offer special thanks to Andrew Brower, James Carpenter, Eugene Gaffney, Pablo Goloboff, Dennis Stevenson, and John Wenzel. Dennis Stevenson gave me much advice on botanical examples and nomenclature, and offered some very timely encouragement as this project progressed. My conception of issues of philosophy and systematic theory, as presented in this volume, has been influenced by discussions with Andrew Brower, James Carpenter, Eugene Gaffney, Pablo Goloboff, and Norman Platnick. Pablo Goloboff was immensely helpful in clarifying my presentation of the quantification of cladistics. Gregory Edgecombe offered suggestions on relevant literature. The students and auditors in my Spring 1998 Principles of Systematics course at the City University of New York field-tested a version of the manuscript. Christine Johnson read and commented on the final manuscript and prepared the figures. Whatever the inputs from others, in the end, I am solely responsible for the final form of all arguments presented in the text.

The development of my views on the nature of systematics was shaped by two people in particular, my long-time friends and colleagues James S. Farris and Gareth Nelson. Since 1967, they, more that any other individuals, have profoundly affected our understanding of systematic theory. Thus, in an indirect way, they have greatly influenced the way I have written this book.

The encouragement of my wife, Brenda Massie, and Steven Keffer caused me to go to work on this project. Their confidence that I could produce a useful final product spurred me on. My young daughter, Ella, has been a patient helper during the preparation of the manuscript. The term ‘systematics’ is now indelibly imprinted in her mind.

Randall T. Schuh
New York, October 1998

ACKNOWLEDGMENTS TO THE SECOND EDITION

This edition of *Biological Systematics* is co-authored by Andrew Brower, a systematic entomologist whose research is focused on the phylogenetic relationships of nymphalid butterflies. Andy's training as a systematist began at Cornell University and continued at the American Museum of Natural History and the Smithsonian Institution. He is extremely grateful to his colleagues and mentors at these institutions for providing a collegial and scholarly environment that gave him the opportunity to develop his perspectives on the discipline. Access to a free copier in a great library is a wonderful thing. As the Rice Professor of Systematic Entomology, Andy taught a graduate course in Principles of Systematics at Oregon State University between 1998 and 2005, an experience that helped him develop an organized framework for training systematics students. He thanks Harold and Leona Rice for their generous support of his systematics research and training program. He would like to acknowledge Darlene Judd for her systematic insight and moral support. He would also like to thank Randall "Toby" Schuh for the opportunity to contribute to this revision of the first edition. Both authors are grateful to Marc Allard and two anonymous reviewers of the revised manuscript for their thoughtful comments. We thank also Gerasimos Cassis, Dimitri Forero, James S. Miller, Mark E. Siddall, F. Christian Thompson, Ward C. Wheeler, and David M. Williams for discussion of our approach, comments on portions of the manuscript, or for other assistance. Once again we acknowledge Pablo Goloboff for his contributions to issues relating to the quantification of cladistics in the first edition, because we continue to use much of that material in the revised version.

Randall Schuh, *New York*
Andrew Brower, Murfreesboro, *Tennessee*
December 2008

SECTION I

BACKGROUND FOR THE STUDY OF SYSTEMATICS

1

Introduction to Systematics

Historical Setting

Systematics is the science of biological classification. It embodies the study of organic diversity and provides the comparative framework to study the historical aspects of evolution. In this chapter we will explore the nature of systematics as an independent discipline and briefly survey the literature sources most frequently used by systematists.

The ancient Greeks produced, beginning in about 400 B.C., the first writings in the Western world that might be classed as scientific by modern standards. Many of the contributions of Plato, his student Aristotle, and others were translated into Latin by the Romans, and also into Arabic, whereby they received wider distribution and by which means many of them survived to modern times. Even though these important writings had great influence in their day, they remained obscure to European scholars for about ten centuries until being "rediscovered" in the Middle Ages. It was that rediscovery, of Aristotle's work in particular, that rekindled interest in the thought processes among Europeans that led to the development of modern science.

The exact nature of Aristotle's contribution to the field of systematics is a subject of varied interpretation, some of it positive, some of it negative, as we will see later on. What is not in dispute is that Aristotle made some of the most detailed observations of the living world during his time, particularly with regard to animals.

Systematics—what is often called *taxonomy*—as currently practiced has its beginning in the work of the Swedish botanist and naturalist Carolus Linnaeus (Carl von Linné) and his contemporaries in the mid-eighteenth century. Linnaeus' work built on the earlier contributions of authors such as the sixteenth-century Italian physician Andrea Caesalpino and the mid-seventeenth-century English naturalist John Ray.

The detailed history of systematics is a fascinating subject in its own right and would shed much light on how current systematic knowledge, and the methods used to acquire that knowledge, have achieved their current form. However, much

of that history is beyond the practical scope of this book. References dealing with the subject are included at the end of the chapter under Suggested Readings. For our purposes, most of the history critical to understanding the current state of affairs in systematic methods dates from about 1950. Therefore, it is the relatively modern literature we will examine in detail.

The fundamental activities of systematics would seem to be of three basic types and have changed little over the last 250 years. *First,* is the recognition of basic units of biological diversity in nature, which are usually called *species.* Our understanding of the perpetuation of species has advanced greatly since the time of Linnaeus, primarily because of improved knowledge of the mechanisms of inheritance. Yet, with more than 2 million described species of plants and animals, it has not been possible to study all of them in detail. Consequently, species are often recognized on the basis of morphological and other characteristics observable in preserved, dead specimens, much as they were in the time of Linnaeus. The details of how species are actually identified and circumscribed in mammalogy, entomology, bryology, and other fields of specialization are beyond the scope of this book.

Second, is the classification of those species in a hierarchic scheme that reflects our understanding of their phylogenetic relationships. The natural hierarchy has been recognized at least since the time of Aristotle, and formal hierarchic classifications of plants and animals as published by Linnaeus existed well before—and provided evidence to support—the widely accepted formalization of a theory of organic evolution by Charles Darwin and Alfred Russel Wallace in the mid-nineteenth century. Linnaeus and other authors of early classifications were content to describe organic diversity as the handiwork of a manifestly beneficent God, and although the divine purpose of these creations might be inscrutable to mortal scientists, their relationships as revealed by similarities and differences of form were not. For example, Linnaeus placed humans and orangutans together in the genus *Homo,* and categorized whales and dolphins as an order of mammals. What changed with the introduction of the Darwinian theory of organic evolution was that the explanation for the observed relationships among organisms shifted from representing the plan of divine creation to revealing the results of evolutionary processes. This change in the causal explanation did not contribute, however, to producing a well-articulated set of methods for discovering the relationships that most investigators began to assume were phylogenetic. That development had to wait nearly 100 hundred years and is the subject matter of much of this book.

Third, is the placement of information about species and their classification in a broader context, a subject to which we will return in Section III of this book.

The Schools of Taxonomy: The Development of Taxonomy in the Twentieth Century

The fundamental challenge of taxonomy is the management and interpretation of vast amounts of potentially conflicting information: which organismal features

are important as evidence of grouping, which are not? While today we have computers that can perform billions of calculations per second, systematists in the nineteenth and early twentieth centuries were forced to document and organize their evidence by hand. This inevitably resulted in classifications being developed on the basis of judgment and experience, and accepted on the basis of the classifier's reputation. By the 1930s, nearly all biologists agreed that an ideal classification ought to reflect the historical pattern of evolutionary divergence, generally referred to as *phylogeny,* but there was no agreement on how that might be determined, and many systematists despaired of ever attaining that phylogenetic nirvana with their chosen group of study. At the same time, systematics, once "the Queen of Sciences" (physics was King), was being eclipsed by the new and exciting field of genetics, which promised to reveal actual mechanisms of evolutionary change.

The Evolutionary Taxonomic Point of View

By the early 1950s, taxonomic theory, referred to as the "new systematics," had become heavily influenced by recent successes in theoretical genetics, from which perspective the study of populations and infraspecific variability represented the crucial element for understanding biological diversity, while efforts to infer phylogenetic relationships were viewed with growing skepticism as speculative flights of fancy. The "new systematic" approach can be appreciated by examining the textbook *Methods and Principles of Systematic Zoology* by ornithologist Ernst Mayr and entomologists Gorton Linsley and Robert Usinger (1953). In that 328-page work, discrimination of species and subspecies occupied most of the substantive discussion of methods. About one-third of the volume dealt with nomenclature. Approximately two pages were devoted to the connection between characters and classification, and virtually no space was allocated to the discussion of techniques for discovering relationships among groups of organisms, be they species or taxa above the species level. The book contained only eight illustrations intended to portray phylogenetic relationships, with no indication as to what, if any, data supported the topologies. In the largely neontological perspective of Mayr, Linsley, and Usinger, knowledge of relationships among taxa was fundamentally bound to a microevolutionary view of organic diversification of populations and was presumably thought to flow directly from it.

A more strongly paleontological view of systematic biology, but one nonetheless closely associated with "evolutionary taxonomy," was portrayed a few years later in George Gaylord Simpson's *Principles of Animal Taxonomy* (1961). Simpson, a specialist on fossil mammals, devoted many pages to the discussion of interrelationships among groups of organisms, while also emphasizing the importance of the temporal perspective that could be gained from geology and the study of change in populations of fossils through time. He observed that "The construction of formal classifications of particular groups is an essential part and a useful outcome of the taxonomic effort but is not the whole or even the focal aim. The

aim of taxonomy is to understand the grouping and interrelationships of organisms in biological terms" (p. 66). Simpson's perspective, reflecting the historical incapacity to objectively infer phylogenetic patterns using traditional methods, was that taxonomy, "is a science, but its application to classification involves a great deal of human contrivance and ingenuity, in short, of art."

Another fundamental aspect of the evolutionary taxonomists' perspective—the view that not only phylogenetic divergence of taxa but also phylogenetic inference by taxonomists—stems from the wellspring of Darwinism, can be gained by examining passages from *The Growth of Biological Thought* (Mayr, 1982:209), where the author noted:

> That Darwin was the founder of the whole field of evolutionary taxonomy is realized by few…the theory of common descent accounts automatically for most of the degrees of similarity among organisms…but also…Darwin developed a well thought out theory with a detailed statement of methods and difficulties. The entire thirteenth chapter of the *Origin* is devoted by him to the development of his theory of classification.

A few pages later (p. 213), in what would appear to be a direct contradiction, Mayr stated, "As far as the methodology of classification is concerned, the Darwinian revolution had only minor impact." However, this statement is couched as a criticism of practicing systematists, whose manifest success in organizing biological diversity was tainted in Mayr's view by their benighted metaphysical commitment to non-Darwinian essentialism. Metaphysical correctness is a concern that continues to inflame the passions of more than a few systematists today. Mayr summarized his opinions by noting that Darwin's decisive contributions to taxonomy were that the theory of common descent provided an explanatory theory for the Linnaean hierarchy and that it bolstered the concept of continuity among organisms.

The most steadfastly defended tenet of classical evolutionary taxonomy, the approach advocated by Mayr and Simpson, is that biological classifications must portray the maximum amount of *evolutionary* information. In the words of another proponent of this approach, "formal classification is an attempt to maximize simultaneously the two semi-independent variables of genetic similarity and phylogenetic sequence," with the caveat that a one-to-one correspondence between classification and phylogeny is impossible (Bock, 1974:391). Mayr's student Bock further opined that improvements in comprehension of systematic relationships among organisms must come through the more thorough study of organismal attributes, not through the introduction of new philosophical approaches. Given the evolutionary taxonomists' quixotic desire to meld the vague concept of similarity with the phylogenetic patterns they viewed as fundamentally unknowable, it is not surprising that not everyone was in agreement with Bock. In fact, two alternative, quite different philosophical approaches were being argued in the literature at the time of his writing.

The Phenetic Point of View

Frustrated with the artful nature of evolutionary taxonomy and the authoritarian posturing of its proponents, a group of self-styled "extreme empiricists" began to propound a new, explicitly quantitative approach to taxonomy in the late 1950s. The pheneticists—including R. R. Sokal, P. H. A. Sneath, A. J. Cain, P. J. Harrison, F. J. Rohlf, P. R. Ehrlich, D. H. Colless, and others—were motivated to make taxonomy objective and "operational," the ultimate goal being to produce general purpose classifications in which relationships among groups of organisms are formed on the basis of overall similarity. The notion that groups based on maximal correspondence of many characters provide the most general classifications was propounded by the positivist philosopher J. S. L. Gilmour (1940), following the empiricist writings of J. S. Mill (1843). According to Gilmour, a natural classification is not one that expresses phylogeny (which in his view was unknowable), but a classification that groups taxa to reflect the greatest overall correspondence of features among the organisms classified. To a certain extent, this philosophical perspective is shared among present-day systematists of all the schools discussed here. However, the measure employed by pheneticists to assess this correspondence was overall similarity. Although this approach was initially called "numerical taxonomy," the term *phenetic*—as introduced by Mayr in 1965—seemed preferable because not all quantitative taxonomic approaches were restricted to the overall-similarity–based phenetic school of thought.

Sociologist-philosopher David Hull (1970) summarized the views of the pheneticists as including (1) the desire to completely exclude evolutionary considerations from taxonomy because in the vast majority of cases phylogenies are unknown; (2) the belief that the methods of the evolutionary systematists were not sufficiently explicit and quantitative; and (3) the observation that classifications based on phylogeny are by their very nature designed for a "special purpose." The reader should keep in mind that the distinction between *special purpose*—or artificial—classifications and *general purpose*—or natural—classifications has been a subject of debate since the time of Linnaeus. The first textbook-length exposition of this body of thought was entitled *Principles of Numerical Taxonomy* (Sokal and Sneath, 1963).

The methods of phenetics are numerous and have never been consistently codified. Some authors have claimed that phenetic methods are—or ought to be—"atheoretical," an obviously nonsensical proposition since "similarity" itself is a complex theoretical concept. In practice, the "atheoretical" aspect of phenetics is usually manifest simply in the view that to avoid subjective bias, all characters should be weighted equally, a notion first expressed by the eighteenth-century French botanist Michel Adanson. For this reason, pheneticists have also been referred to as neo-Adansonians.

The phenetic approach, as expounded by Robert Sokal and Peter Sneath, was based on Gilmour's precept that classifications incorporating the maximum

number of unweighted observations would be general purpose, rather than being disposed toward some particular scientific theory, such as that of organic evolution. "Operationalizing" taxonomy, would, in the view of the pheneticists, make the process of data gathering unbiased, practicable by an "intelligent ignoramus" (i.e., a nonspecialist in the group under study), and possibly amenable to automation and the use of computers.

Phenetic techniques are implemented by converting the numbers of character-state similarities and differences among all characters into a matrix of pairwise distances of the type shown in Figure 1.1. Phenetic algorithms originally treated rates of evolutionary change across lineages as equal, as exemplified by the Unweighted Pairgroup Method of Analysis (UPGMA). More recent applications of the phenetic approach (such as the Neighbor Joining algorithm) have applied less restrictive assumptions and allow for variable rates of change across lineages. Nonetheless, both of these approaches are "phenetic" because they convert the original data into "distances" between pairs of taxa and form groups on the basis of overall similarity. The exact nature of that similarity cannot be specified, however, because all hypotheses of relationship in the resulting classification are derived from a matrix of similarities, not from the matrix of the characters themselves.

The Phylogenetic (Cladistic) Point of View

The German entomologist and systematic theorist Willi Hennig believed that "The task of systematics is the creation of a general reference system and the investigation of the relations that extend from it to all other possible and necessary systems in biology" (Hennig, 1966:7). He first propounded a set of "methods and principles" in a 1950 work entitled *Grundzüge einer Theorie der phylogenetischen Systematik,* which was later modified and published in English under the title *Phylogenetic Systematics* (Hennig, 1966). In distinct contrast to the pheneticists, Hennig argued for an approach that he believed would directly reflect information concerning the results of the evolutionary process. Hennig viewed the hierarchic classifications long produced by systematists as the general reference system of biology, but he argued that the utility of that system could be maximized only if it accurately reflected the phylogenetic relationships of the organisms involved. This last point was not accepted by the pheneticists, nor was it accepted by the evolutionary taxonomists, as seen in Simpson's belief that "classification involves a great deal of human contrivance and ingenuity, in short, of art." Hennig's approach, at first labeled *phylogenetic systematics*—but today called *cladistics*—forcefully articulated the idea that classifications intended to reflect genealogical relationships should be based on *special similarity* (shared derived characters) and that those relationships should be reflected in a formal hierarchic listing.

In fairness to history, the methods described by Hennig had apparently been applied by earlier workers—as for example P. C. Mitchell, working with birds (1901; as cited in Nelson and Platnick, 1981) and W. Zimmermann (1943), working on plants. And, as was pointed out by Platnick and Cameron (1977), the fields

Sidebar 1
Clades, Cladistics, Cladists, and Other Terms

The term *clade* (from the Greek *klados,* branch) was used in the 1950s by Huxley to denote an evolutionary lineage. Cladistic relationships (expressing relative recency of common ancestry) versus phenetic relationships ("arrangement by overall similarity based on all available characters without any weighting") were contrasted by Cain and Harrison (1960), and the term *cladistics* was applied to phylogenetic systematic studies of the type espoused by Willi Hennig as early as 1965 by Camin and Sokal and also by Mayr. The graphical depictions of phylogenetic relationships produced by these methods were called *cladograms* by those same authors. The term *cladist* was also soon in use, initially often as a pejorative, to refer to one who used the methods of Hennig.

At that same time that "cladistics" was joining the lexicon, Mayr, Sokal, and Camin popularized the term *phenetics* for an approach widely known earlier as "numerical taxonomy." Mayr made it clear that it was the numerical taxonomists' methods and their justification that were distinctive, rather than the use of numerical techniques per se. The diagrams of relationships produced with phenetic techniques were called *phenograms* by Mayr and Camin and Sokal. Those who practiced phenetics were soon called *pheneticists.*

The additional terms *syncretist* and *gradist* are also to be found in the literature. They usually refer to individuals whose approach to taxonomy reflects a combining of methodologies into what is often called *evolutionary taxonomy.*

of textual criticism (stemmatics) and historical linguistics both use methods nearly identical to those propounded by Hennig for establishing historical relationships among manuscripts and languages, respectively. Thus, the approach of grouping by special similarity seems to have a general applicability to systems involving lineage evolution and diversification over time. Within biology, the earlier applications of the cladistic approach—as by Mitchell—seem not to have been sufficiently influential to revolutionize systematics.

How Evolutionary Taxonomy, Phenetics, and Cladistics Differ

It may seem paradoxical that in 1965, after more than 200 years of research effort, the field of systematics still did not have a clearly codified—and broadly accepted—set of methods. Yet, that was indeed the case.

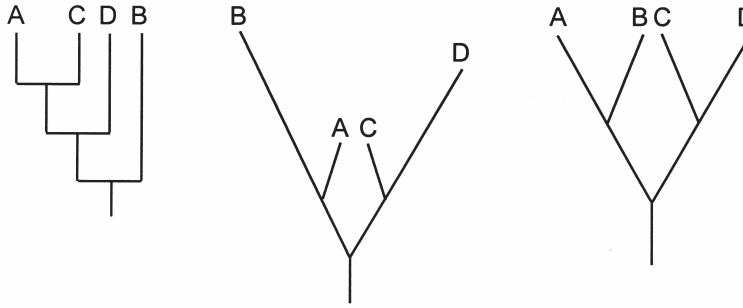

Phenogram, showing levels of clustering based on overall similarity.

Evolutionary tree, showing genealogical relationships and degree of divergence.

Cladogram, showing genealogical relationships solely as recency of common ancestry.

CHARACTER MATRIX

Taxon \ Character	1	2	3	4	5	6	7	8	9	10	11	12	13	14	15	16	17	18	19	20
Group X	0	0	0	0	0	0	0	0	0	0	0	0	0	0	0	0	0	0	0	0
Group A	1	1	0	0	0	0	0	0	0	0	0	0	0	0	0	0	0	0	0	0
Group B	1	0	0	0	0	1	1	1	1	1	1	1	1	1	0	0	0	0	0	0
Group C	0	0	1	1	1	0	0	0	0	0	0	0	0	0	0	0	0	0	0	0
Group D	0	0	1	0	0	0	0	0	0	0	0	0	0	0	1	1	1	1	1	1

DISTANCE MATRIX

	A	B	C	D
A	0			
B	10	0		
C	5	13	0	
D	9	17	8	0

Fig. 1.1. Cladistic character matrix and the corresponding phenetic distance matrix for four groups of organisms. The character states for Group X, the outgroup, determines the polarity of the characters, and provides a root for the evolutionary tree and cladogram (see Chapter 3). The distances are computed by counting the number of character differences between all possible pairings of taxa. The phenogram, evolutionary tree, and cladogram depicting relationships among the four groups are determined by the methods of phenetics, evolutionary taxonomy, and cladistics, respectively. The pattern of grouping shared by the evolutionary tree and the cladogram is based on characters 1 and 3, which exhibit the only derived states shared by more than a single taxon. The phenogram, driven by the similarity of ancestral states in characters 6–20, has a different topology: The taxa with the smallest amount of change are clustered. This example reveals the sensitivity of the methods originally applied by pheneticists to variability in evolutionary rates among the different groups of organisms (modified from Farris, 1971).

Let us pose four questions as a way of examining the basic precepts of the three "schools" introduced above, each of which was competing for the primacy of its point of view as the most efficacious approach to the study of biological systematics.

1. *Can and should we attempt to group taxa in a manner that reflects their putative pattern of phylogenetic divergence?* The phenetic point of view was clearly "No," whereas evolutionary taxonomists and cladists felt just the opposite.
2. *Does evolutionary change proceed at the same rate in different lineages?* Since they deliberately eschewed evolutionary biases, the pheneticists were not concerned—and perhaps even approved—that the methods they applied assume equal rates of change among lineages (this assumption contributed to their ultimate undoing). The evolutionary taxonomists thought that rates varied, and wished to incorporate that information in their results, particularly with regard to grouping together "primitive" taxa with relatively low rates of change. The cladists applied methods that were unaffected by variation in rates among lineages and came to conclusions distinct from those of the other two schools about how the results of differences in rates of divergence across lineages might best be portrayed in formal classifications.
3. *What type of information is counted as evidence of grouping?* As noted, phenetic algorithms transform character matrices into distance matrices, by converting the proportion of character-state matches between each pair of taxa into an overall percent similarity. Thus, phenetic groups are those with the highest similarity scores, regardless of whether the similarities are due to shared changes or shared lack of change. Cladists count character-state transformations, forming groups of those taxa united by the greatest number of shared transformations. Evolutionary taxonomists also group taxa based on character-state transformations, except sometimes they choose to ignore these data in favor of phenetic similarity. Consider the following example:

Taxon	A	B	C	D
State	x	x	y	y

   A pheneticist would recognize (A + B) *and* (C + D), while a cladist would recognize (A + B) *or* (C + D), depending on whether state x or state y is inferred to be the derived condition. It is hard to say which of these alternatives an evolutionary taxonomist would prefer because it would be determined by choice rather than by a rule.
4. *Are all attributes of organisms useful in forming classifications?* Pheneticists thought the answer was yes. Because they count state similarities regardless of whether they are ancestral or derived, their methods explicitly used techniques that measured the degree to which groups were similar *and* different; these measures were mediated by the assumption of a constant rate of change among

Table 1.1. Attributes of the "Three Schools" of Systematics

	Phenetics	Evolutionary Taxonomy	Cladistics
Data type	character data converted to matrix of distances between taxa	discrete characters	discrete characters
Grouping method	overall similarity	special similarity	special similarity
Diagram type	phenogram	evolutionary tree	cladogram
Hierarchic level determined by	amount of difference	amount of difference	sharing of unique attributes
Sensitive to rate	yes	yes	no

lineages. Cladists took the view that groupings could be formed only on the basis of shared derived attributes, for to do otherwise would be to allow any possible grouping. Many evolutionary taxonomists accepted Hennig's cladistic point of view concerning the formation of unique traits in certain lineages during the course of evolution, but maintained that overall degree of difference among lineages should be recognized in assigning rank in formal classifications. The result was the formation of groups based on arbitrary combinations of ancestral and derived character states.

The salient attributes of the three taxonomic approaches are characterized in Table 1.1. Figure 1.1 shows phenetic and cladistic approaches for presenting data, and the results of analyzing those data. As can been seen, cladistic methods group taxa by the presence of shared, derived attributes unique to the group being formed. To the contrary, phenetic methods group taxa by degree of difference, with the consequent discarding of information on attributes that are unique to groups. Thus, groups A + B and C + D are found in the cladogram, but neither group is seen in the phenogram. This is because B is so different from A, and D is so different from C, that neither forms a group with its "nearest relative," but rather A and C group together because they are less different from each other than either is from the other two taxa. Thus, under phenetic methods, a large number of uniquely derived attributes (e.g., characters 6–13 in taxon B, and characters 15–20 in taxon D) will cause a group to be formed (A + C), even though the members of that group share no derived attributes in common. In contrast, cladistic methods form groups only on the basis of shared derived attributes (group A + B, character 1; group C + D, character 3) and treat attributes unique to a single taxon (e.g., those occurring in taxa B and D) as irrelevant to the recognition of groups. In this example, an evolutionary taxonomist would recognize the same topology as the cladist, but also be influenced by the degree of divergence (difference) contributed by the uniquely derived attributes.

Sidebar 2
The Writings of Willi Hennig: From Relative Obscurity to Preeminence

The original works of Willi Hennig on "phylogenetic systematics," and his published examples applying that method, were not widely read and appreciated because they were written in German and were therefore largely obscure to western systematists. Two 1966 publications, in English, changed this situation: Hennig's *Phylogenetic Systematics,* which was translated from a German-language manuscript, and a monograph by the Swedish entomologist Lars Brundin (1966) entitled *Transantarctic Relationships and Their Significance, as Evidenced by Chironomid Midges.*

The work of Brundin was unique in arguing persuasively for the merits of Hennig's methods, while simultaneously offering an application of them to a relatively complex real-world problem. The end result was a magnificent taxonomic and biogeographic example in support of the Hennigian approach, analogous to the manner in which H. W. Bates' 1862 work on mimicry in butterflies served as an elegant corroboration of Darwin's theory of natural selection.

Gareth Nelson, late a postdoc from the Swedish Natural History Museum, personally transported the ideas of Hennig and Brundin to the offices and lecture halls of the American Museum of Natural History when he joined the staff of that institution as a curator of ichthyology in 1967. Nelson further invigorated discussion of the subject through his editorship of *Systematic Zoology* from 1973 to 1976. Whereas some entomologists, such as Pedro Wygodzinsky, had independently become familiar with and applied Hennig's approach in their work, it was primarily Nelson's influence that changed the thinking of vertebrate systematists.

The transmission of phylogenetic methods to botanists has taken place more recently. As late as 1978, Bremer and Wanntorp lamented that botanists still had not recognized the importance of Hennig's work and pointed to some of the glaring cases of paraphyletic groups, such as Dicotyledoneae, still recognized in all major classifications of higher plants at that time. Today, the cladistic revolution in botany has certainly caught up with zoology, not only in the recognition of monophyletic groups through the application of cladistic principles but also in the production of classifications based on extensive databases of DNA sequence data (Angiosperm Phylogeny Group, 2003; Soltis et al., 2005) and the preparation of second-generation textbooks based on phylogenetic principles (Judd et al., 2007).

Alternative Approaches to Classification

The pheneticists argued for forming and recognizing groups on the basis of overall similarity, an approach implemented through the acquisition and analysis of as much "objective" data as possible. Their anti-phylogenetic stance and quantitative persuasion set them apart for a while, but it was soon pointed out that phenetics and classical evolutionary taxonomy actually shared a critical element in common; that is, both approaches emphasized the importance of "overall similarity" in establishing rank in formal classifications. Cladistics, on the other hand, emphasized groupings based solely on "special similarity," what Hennig called *synapomorphy.* If the classical evolutionary taxonomists and cladists could have agreed on the significance of *autapomorphies*—features unique to a single group—for the construction of formal classifications, they might have agreed on the choice of methods. Such was not the case, however.

Evolutionary taxonomists recognized the importance of synapomorphy but also wanted to accommodate degree of difference in their circumscription of named taxonomic groups. For this reason, the pheneticists' and classical evolutionary taxonomists' classifications are often more similar to one another than to cladistic classifications. If this association at first seems contradictory—in light of the philosophical gulf separating these two groups of practitioners—consider the following statements by Mayr (1982:230): Cladistic "classifications are based entirely on synapomorphies [shared special similarities], even in cases, like the evolution of birds from reptiles, where the autapomorph characters [unique special similarities] vastly outnumber the synapomorphies with their nearest reptilian relatives," and (p. 233) "the main difference between [classical evolutionary taxonomy] and cladistics is in the considerable weight given to autapomorph characters." In other words, because birds have so many attributes unique to themselves, they should not be classified as a subgroup of Reptilia, even though all of their novel features are simply modifications of the more general attributes (*symplesiomorphies*) shared among dinosaurs, crocodiles, lizards, and other "reptiles." Mayr, in his role as one of the most vocal spokesmen for the classical evolutionary taxonomists, made it clear in this statement that autapomorphies (and their complementary symplesiomorphies) must be considered in the recognition and ranking of groups in classifications. Mayr cited examples to demonstrate why excluding unique characters in assessing rank produces what he believed to be absurd results. Mayr's taxonomic abominations included the grouping of man with the great apes as proposed by Linnaeus, among others, and more poignantly for him as an ornithologist, the treatment of birds and crocodiles as each others' nearest relatives among living organisms, or birds as a subgroup of dinosaurs when extinct groups are also considered. The rejection by cladistic taxonomy of symplesiomorphies, such as lack of feathers and presence of teeth that make Reptilia a "group" separate from birds, is what Mayr argued against, and it is exactly that methodological attribute—the counting of symplesiomorphies as evidence of grouping—that distinguishes cladistics from classical evolutionary taxonomy and phenetics.

To further illustrate this point, consider the following classifications of the living amniote tetrapods as they might be produced by the three schools of taxonomy:

Evolutionary taxonomic classification:

- Class Mammalia
- Class Reptilia
  - Subclass Testudines (turtles)
  - Subclass Squamata (lizards, snakes, crocodiles)
- Class Aves

Phenetic classification:

- Class Mammalia
- Class Reptilia
  - Subclass Testudines
  - Subclass Squamata
- Class Aves

Cladistic classification:

- Class Mammalia
- Class Reptilia
  - Subclass Testudines
  - Subclass Sauria
    - Infraclass Squamata (lizards and snakes)
    - Infraclass Archosauria (crocodiles, birds)
      - Order Crocodilia
      - Order Aves

Even though the evolutionary taxonomists are aware that birds are phylogenetically part of the Reptilia, their desire to express degree of difference in formal classifications obscures that relationship. Only the cladistic arrangement of groups within groups accurately represents in the formal classification the nested pattern of shared, derived attributes that is considered to portray genealogical connections.

Our discussion of classificatory methods so far has been based largely on the work of zoologists because their works most clearly express the controversies surrounding classificatory methods and because the taxa discussed will be familiar to many readers. In botany there is a tremendous amount of synthetic taxonomic work, but a significant influence on its preparation seems to stem from tradition rather than from a more critical approach to the selection and consistent application of methods. Nonetheless, the underlying philosophy employed in many botanical classifications is clear, as it is in zoology. Consider for example the classification of seed plants at the highest levels.

Traditional classification (e.g., Lawrence, 1951):

- Phylum Spermatophyta
  - Subphylum Gymnospermae
    - Class Cycadales
    - Class Ginkgoales
    - Class Coniferales
    - Class Gnetales
  - Subphylum Angiospermae
    - Class Dicotyledoneae
    - Class Monocotyledoneae

Cladistic classification (Loconte and Stevenson, 1990, 1991):

- Phylum Spermatophyta
  - Subphylum Cycadales
  - Subphylum Cladospermae
    - Infraphylum Ginkgoales
    - Infraphylum Mesospermae
      - Microphylum Coniferales
      - Microphylum Anaspermae
        - Class Gnetales
        - Class Angiospermae
          - Subclass Calycanthales
          - Subclass [Unnamed]
            - Infraclass Magnoliales
            - Infraclass [Unnamed]
              - Microclass Laurales
              - Microclass [Unnamed]
                - etc.

In the traditional classification, the Gymnospermae (including fossil taxa) are a group without any characteristics distinctive to them, but rather are recognized by having seeds with two cotyledons and not having flowers. Obviously all Spermatophyta have seeds, most of which have two cotyledons, and therefore this attribute is not distinctive for the Gymnospermae. The Dicotyledoneae, the classification of which is listed only in part, are defined in a similar way: plants with flowers and two cotyledons. But, most seed plants other than monocots have two cotyledons; therefore the characteristics of the Dicotyledoneae are more accurately stated as plants with flowers and without seeds with one cotyledon. The cladistic approach, which distinguishes synapomorphies from symplesiomorphies, has shown that Gymnospermae and Dicotyledoneae, and other long-recognized higher groupings within the green plants, are not substantiated by derived features but rather by a combination of attributes that also occur in other groups, or by the absence of the apomorphies that define their sister taxa. Clearly, the methods, whether explicit or not, are phenetic.

As currently understood, then, approaches to biological classification can be recognized as being of two obvious types: those that treat overall similarity as important in group recognition, and those that group by special similarity alone. Alternatively stated, the former school adheres to the idea that the amount of apparent difference among groups is important in circumscribing relationships, whereas the latter does not. The first great period of modern systematic controversy ended with the decline of phenetic and narrative evolutionary taxonomic schools, as a general consensus emerged in the 1980s that the cladistic approach offers compelling methodological and philosophical advantages over those alternatives. It is in light of this consensus and these advantages that this book is primarily focused on the explication of cladistic methodology. We will explore further the philosophical strengths and purported weaknesses of cladistics in comparison to more recently developed statistical approaches to phylogenetic inference in Chapters 3 and 5, as well as delving into the last strongholds of grouping by overall similarity when discussing the analysis of molecular data.

Some Terms and Concepts

To aid our subsequent discussion of systematics, it will be helpful to clarify the meanings of several commonly used terms and to make further observations on the place of systematics within the broader field of biology. These definitions will help us to better comprehend the types of scientific problems systematists attempt to solve and to gain perspective on the scientific contributions of systematics as a field. The glossary at the back of the book includes definitions for all italicized technical terms used in this volume.

Taxonomy and *systematics* are terms that embody the activities of systematists, but the exact meanings ascribed to them have varied widely. Referring once again to the work of Simpson (1961:7), we find the following definitions:

> Taxonomy is the theoretical study of classification, including its bases, principles, procedures, and rules.
>
> Systematics is the scientific study of the kinds and diversity of organisms and of any and all relationships among them.

As Simpson's definitions suggest, systematics has often been used as the more inclusive term, with taxonomy and classification subsumed within it. In contrast, others have argued that the terms are synonymous, that systematics is the term having historical precedence, and that taxonomy should therefore be supplanted. Politically artful use of the terms, stemming from eighteenth-century debates about "system" (the quest for the true Natural Order) versus "method" (development of convenient but artificial classifications), has at times suggested that taxonomy somehow represents a mundane activity most closely associated with

identification and that systematics is the more elevated form of the discipline. Among such usages could be included "biosystematics," a term implying the integration of a broader range of biological information than would be the case within "ordinary" systematic studies, and a consequent elevation of the status of the field (e.g., Ross, 1974).

Systematics is the term used throughout this work because of its wide usage and broad connotation, particularly toward the realm of theoretical methodology. *Taxonomy* would, nonetheless, serve equally well. The field of study subsumed under these terms encompasses the methods and practice of describing, naming, and classifying biological diversity, at the species level and above.

Classification represents the nomenclatural or hierarchic formalization of systematic studies. According to Simpson (1961:9), "classification is the ordering of animals into groups (or sets) on the basis of their relationships, that is, of associations by contiguity, similarity, or both." This definition is concise and clear, marred only by the evolutionary-taxonomic equivocation about the basis for determination of "relationships" discussed in the previous section. Sorting out those similarities that imply contiguity (synapomorphies) from those that do not (symplesiomorphies), and thereby arriving at classifications that reflect the historical pattern of evolutionary divergence, as best it may be inferred, is the subject of much of this book.

Within biology, the term classification usually refers to a "natural hierarchy," a nested set of groups within groups that is intended to reflect genealogical relationships among organisms. That is not to say that other types of classifications are not used by biologists or by other scientists. For example, special purpose classifications are commonly found in the form of keys (Fig. 1.2)—schemes usually designed to facilitate the efficient identification of organisms. Such classifications are often based solely on the concept of similarity and may bear little resemblance to a "natural hierarchy."

A classification frequently contrasted to biological classification is the periodic table of the elements, the natural hierarchy of which is organized to reflect not putative historical patterns but rather the increasing atomic numbers and electron complements of the various chemical elements. It is interesting to note that Mendeleev's original conception and execution of the periodic table was realized on the basis of chemical reactivities and atomic weights, prior to the discovery of many of the subatomic properties the table is now employed to explicate (Brower, 2002). This parallels the observation mentioned earlier that the "natural system" of Linnaeus, Cuvier, and other pre-Darwinian systematists was an empirically valid pattern, even though their explanation of its cause is now considered to be nonscientific.

As we shall see, the activity of preparing formal classifications depends on the adoption of a set of procedures, as discussed in Chapter 7, rather than the direct resolution of a scientific problem. Nonetheless, biological classifications have great scientific value, although the limits of their utility and the means by which they store and transmit information have often been misunderstood. These

misunderstandings have led to many erroneous criticisms concerning the flaws of taxonomy. We will discuss formal classifications further in Chapter 7.

In sum, the question of whether a consensus of opinion exists as to the precise meanings of the terms *systematics, taxonomy,* and *classification* might best be made by pondering the titles of once-influential works describing the methods and procedures of this general field of study. Among many possible examples, we could mention Simpson's *Animal Taxonomy,* Ross's *Biological Systematics,* Mayr's *Principles of Systematic Zoology,* and Crowson's *Classification and Biology.* All of these authors discussed essentially the same subject, but had little hesitation in using these three closely related terms to describe that subject.

Identification usually means "to place a name on." We might say that a specimen was identified as such-and-such species, or a specimen was "determined" to be such-and-such. Identification is an important day-to-day activity for most systematists, and possibly for most human beings, but the activity does not form the basis for recognition of groups or for establishing relationships among them. Rather, correct identification is an application of knowledge obtained from the fundamental work of systematics.

The Place of Systematics within Biology

There is a frequently held perception on the part of the general public, and some scientists, that equates science with experiment. Much of science is experimental in nature, but this is not a prerequisite for qualifying as "scientific." Systematists make discoveries about the natural world, but those discoveries are usually not the result of experiment but rather of observation and comparison. That science need not be experimental might be appreciated by observing that sequencing the human genome and making celestial observations with the Hubbell Space Telescope do not involve experiment but nonetheless represent important and valid endeavors in science.

The field of biology has been divided in many ways. Not all of these divisions are easily compared, and indeed some are incompatible. The division can be organism based, such as *botany* and *zoology.* Or it might be practical, such as *agriculture* and *medicine.* These approaches have not served well to incorporate systematics as a field of study. More constructively we might divide academic biology into *evolutionary* and *non-evolutionary, comparative* and *general,* or *reductionist* and *integrative.* Even these dichotomies have their limitations: In universities, one frequently finds systematics subsumed under more general categories such as "ecology and evolution," within which it is viewed as a relatively arcane elective component of specialized graduate education. In some programs, systematics has been eclipsed by the nebulous disciplines of genomics and bioinformatics, which focus almost entirely on molecular data. These trends are unfortunate because stronger emphasis on sound training in systematic principles could help forestall the uncritical and frequently ill-conceived proliferation of

KEY TO MALES OF NEARCTIC *ATRACTOTOMUS*

1. Hind femora with moderate to dense covering of appressed, scalelike setae (figs. 81, 82), or rarely with scalelike setae restricted to ventral surface of femora (fig. 91) 2
   Hind femora without scalelike setae .. 10

2(1). Hemelytral membrane with scalelike setae, usually most abundant inside areolar cells and along veins (fig. 13) .. 3
   Hemelytral membrane without scalelike setae 4

3(2). Antennal fossae nearly contiguous with anteroventral margin of eye; length of antennal segment II slightly greater than width of head across eyes; peritremal disk and coxae pale .... *taxcoensis*, new species
   Antennal fossae removed from anteroventral of eye by distance equal to or greater than diameter of antennal segment I (fig. 7); length of antennal segment II much less than width of head across eyes (ratio—0.46:1 to 0.62:1); peritremal disk and coxae dark, or disk rarely somewhat paler than adjacent thoracic sclerites ..... *balli* Knight

4(2). Hind femora with scalelike setae restricted to narrow band on ventral surface (fig. 91) ..... *tuthilli* (Knight)
   Hind femora with more or less generally distributed scalelike setae (figs. 81, 82) 5

5(4). Tibiae uniformly dark reddish brown or black, never paler than adjoining femora; antennal segment III uniformly darkened, without pale region basally; dorsum uniformly dark brown or black, without red or yellow markings ... 6
   Tibiae, at least distally, yellow or brownish yellow, rarely somewhat darker, but always paler than adjoining femora; antennal segment III uniformly pale yellow to yellowish brown, or with distinct pale region basally; dorsal coloration variable, usually with at least bases of corium and clavus, embolium, and cuneus yellowish brown or red 8

6(5). Antennal segment II strongly inflated, greatest thickness nearly twice that of segment I (fig. 41); length of gonopore sclerite in lateral view approximately 1.5 times that of the gonopore (figs. 140, 141) ..... *reuteri* Knight
   Antennal segment II linear or weakly clavate, not strongly inflated, greatest thickness rarely little more than that of segment I (figs. 18, 22); length of gonopore sclerite in lateral view approximately twice that of the gonopore (figs. 120, 121, 123, 124) 7

7(6). Ratio of length of antennal segment II to width of head across eyes from 0.85:1 to 0.92:1; vesica as in figures 120 and 121, spinose field on gonopore sclerite usually broad proximally .... *arizonae* (Knight)
   Ratio of length of antennal segment II to width of head across eyes from 0.73:1 to 0.80:1; vesica as in figures 123 and 124, spinose field on gonopore sclerite usually narrow proximally .... *cercocarpi* Knight

8(5). Ratio of length of antennal segment II to width of head across eyes from 0.86:1 to 0.90:1; vesica as in figure 160, with short gonopore sclerite, and gonopore well removed from apex of vesical strap ..... *ramentum*, new species
   Ratio of length of antennal segment II to width of head across eyes from 0.72:1 to 0.83:1; vesica either with long gonopore sclerite (fig. 162), or gonopore located near apex of strap (fig. 122) .. 9

9(8). Vesical strap distad of medial coil elongate, gonopore removed from apex, gonopore sclerite with elongate row of evenly distributed spines (fig. 162) ... . *rubidus* (Uhler)
   Vesical strap distad of medial coil short, gonopore near apex, gonopore sclerite with spines mostly restricted to distal half (fig. 122) ..... *atricolor* (Knight)

10(1). Hemelytral membrane with widely distributed scalelike setae (fig. 12) .... *acaciae* Knight
   Hemelytral membrane without scalelike setae 11

11(10). Dorsum without scalelike setae 12
   Dorsum with scalelike setae, sometimes restricted to anterior margin of pronotal disk and bases of clavus and corium 13

12(11). Head, pronotum, and base of hemelytra yellowish orange, sometimes tinged with red; remainder of hemelytra shiny black; ratio of width of vertex to width of head across eyes from 0.48:1 to 0.51:1 .... *chiapas*, new species
   Head, pronotum, and hemelytra uniformly reddish brown; ratio of width of vertex to width of head across eyes from 0.36:1 to 0.40:1 .... *polymorphae*, new species

13(11). Hemelytra with light and dark scalelike setae ..... *nicholi* Knight
   Hemelytra with silvery white scalelike setae only 14

14(13). Antennal segment II yellow or brownish yellow, rarely with apex narrowly darkened 15

43. GALACTIA Adans. Fam. Pl. **2**: 322. 1763.

Scandent or erect herbs or shrubs; leaves pinnately 3 or 5-foliolate, the leaflets large or small; flowers small or large, usually racemose; fruit linear, bivalvate.

Leaflets 4 to 9 cm. wide. Plants scandent_____1. G. viridiflora.
Leaflets less than 3.5 cm. wide.
  Flowers in axillary clusters_____2. G. brachystachya.
  Flowers racemose.
    Racemes stout, dense, sessile, mostly shorter than the leaves.
      3. G. multiflora.
    Racemes slender, interrupted, pedunculate, mostly longer than the leaves.
      Plants erect; leaflets acute or acuminate_____4. G. incana.
      Plants scandent or trailing; leaflets often obtuse.
        Leaflets glabrous on the upper surface_____5. G. acapulcensis.
        Leaflets variously pubescent on the upper surface.
          Leaflets bright green on the upper surface, not closely sericeous on either surface_____6. G. striata.
          Leaflets grayish, closely sericeous on both surfaces.
            Leaflets white beneath with a soft silky pubescence, oval or ovate.
              7. G. argentea.
            Leaflets grayish beneath with rather stiff pubescence, usually oblong_____8. G. wrightii.

Fig. 1.2. Examples of dichotomous keys. Groups are progressively subdivided using easily recognized characteristics, but those characteristics may have little value in forming natural groups. The indented format is frequently used in botanical works. Partial key of the insect genus *Atractotomus* from Stonedahl (1990; courtesy of The American Museum of Natural History). Key to the Mexican species of plant genus *Galactia* from Standley (1922).

phylogenetic applications by geneticists, molecular biologists, and other users of the systematic "toolbox," as will be discussed in subsequent chapters.

Systematics is the most strongly comparative of all of the biological sciences and it methods and principles transcend the differences between botany and zoology. It is also the most strongly historical subdiscipline within biology and as such provides the basis for nearly all inferences concerning historical relationships. Among the earth sciences, systematics is directly comparable to historical geology, and indeed the two fields find integration in paleontology.

We might contrast systematics with "general biology," which often involves the study a single species or a single organ system. Such an approach is nonhistorical and places limited reliance on comparisons among species and their organ systems.

The Units of Systematics

A *taxon* (plural *taxa*) is the basic unit of systematics. This term can be used to refer to a grouping of organisms at any level in the systematic hierarchy. It does not refer to individual organisms, although such are often studied by systematists

as representatives of a given taxon. Because it is frequently necessary to refer to a taxon without reference to its hierarchic position, a number of methods for making such reference have been developed. Thus, terms such as taxon, terminal taxon, and *operational taxonomic unit* (OTU) have been proposed, the first two being used primarily in cladistics, the last arising out of phenetics. Although such terms may carry somewhat different connotations, depending on the author who is using them, the general sense is frequently the same. We defined taxon above; we might define a *terminal taxon* as a group of organisms that for the purposes of a given study is assumed to be homogeneous with respect to variation in the characters that bear upon its relationships to other such groups (attempting to avoid perceived evolutionary baggage of prior taxonomic hypotheses, pheneticists employed the term *operational taxonomic unit* (OTU) as a synonym for terminal taxon). In general, cladists consider that all taxa other than species should be monophyletic groups.

The biological literature is replete with discussions of speciation mechanisms and species concepts. For two reasons, these areas will not be discussed in detail in this book First, the actual mechanisms of species formation are irrelevant to most systematic conclusions—systematists are mainly concerned with relationships among species rather than with populations in the process of speciating. Second, although the search for a definition of species is a pervasive element in the biological literature, the formal codification of a species concept applicable across all of biology has proved elusive and may be unnecessary. Systematists deal with recognizable or diagnosable taxa, be they at the minimum level (usually called species) or at some more inclusive level. Whatever they are called, taxa at any level (if they are recognizably distinct) form valid units for systematic analyses. Many useful references on species and speciation exist, and the reader is encouraged to search them out (e.g., Ereshefsky, 1992; Claridge et al., 1997; Futuyma, 1998; Howard and Berlocher, 1998; Wilson 1999; Wheeler and Meier, 2000; Hey 2001; Coyne and Orr, 2004). Furthermore, nearly any college course in population genetics or evolution deals extensively with issues of species formation. Thus, readers of this volume should already be familiar with these general issues of evolutionary biology.

One might legitimately ask, however, if the approach of accepting some minimal-level taxon does not allow for the treatment of males and females as different taxa, or the treatment of different morphs of a polymorphic taxon as distinct taxa. The answer must be that such an approach would be naive, ignoring much of what biologists would hold to be self-evident—the contiguity of parents and their offspring, whether the parents are bisexual, asexual, or hermaphroditic. The practical aspects of studying the natural world at times confound this seemingly simple issue. For example, in certain groups of wasps, virtually independent classifications exist for the males and the females because current knowledge does not allow for unequivocal association of the two sexes of the same species. Species discrimination among clonal organisms or suspected hybrids can also be problematic. In fungal systematics, there are formally separate nomenclatures for anamorph and

teleomorph life stages, reflecting the long-standing historical incapacity to associate "mushrooms" (ascocarps and basidiocarps) with their vegetative hyphae. Indeed, the solutions adopted by specialists in one group of organisms may be quite different from those applied in another. In some cases the problem will be evident and therefore subject to resolution before detailed systematic studies commence; in other cases solutions to such problems will only be clarified through careful systematic study.

Taxa bear *characters,* and it is by these attributes that they are recognized (diagnosed; defined). It is the characters that are usually viewed as the data of systematics, what Ross (1974) referred to as the "material basis of systematics." *Species can be recognized by some unique combination of characters,* although many may also possess attributes unique to themselves. At the level of more inclusive groupings, such as genera or families, taxa cannot be diagnosed by this method because any and all possible combinations of groupings would thereby become possible. This produces untenable and relatively useless classifications. Thus, *inclusive groupings of two or more "species" should be recognized on the basis of shared possession of unique characters, which do not also occur in other groups.*

The diagnosis of species is not always clear cut and may take on a subjective quality. For example, earlier in this century, ornithologists recognized some 20,000 species of birds, whereas now they recognize about 9,000 species (Haffer, 1997). Presumably, birds have neither speciated nor de-speciated during this short period of time. What has changed, however, is the "concept" of the minimal diagnosable unit. The number of bird species is beginning to rise again. This is not so much because truly new species are being discovered but because more critical studies have clarified that what were once thought to be variants within a "species" should be interpreted as independent lineages in nature—lineages with distinct histories that can be studied with the tools of systematics (e.g., Cracraft, 1992).

The Systematic Literature

The systematic literature begins with the earliest works purporting to represent biological classifications. Because of the tremendous biological diversity dealt with by systematists, we are confronted with an almost overwhelming number of pertinent publications. Much of the systematic literature will not be found in local libraries, or even in many college or university libraries, but rather exists only in specialized research libraries. A brief survey of the types of publications containing information on biological systematics will help to orient a search for relevant books, articles, and other reference materials.

Descriptive Works

Documentation of biological diversity historically has been a largely descriptive enterprise. This work includes not only the recognition of plant and animal

Mertila bhamo, new species
Figures 36, 38

DIAGNOSIS: Recognized by the broadly reddened bases of clavus and corium; length of antennal segment II nearly equal to width of head across eyes; prominent tylus; and the structure of the male genitalia (fig. 38), especially the large, spinelike tubercles on basodorsal margin and inner-medial surface of right lateral process of genital capsule (fig. 38b, c).

DESCRIPTION: MALE. Length 6.25; dark, metallic coloration on distal portion of clavus and corium not extending anteriorly beyond level of apex of scutellum, embolium pale to near level of apex of corium. HEAD. Width across eyes 1.40, width of vertex 0.72; tylus prominent, strongly produced basally; length of antennal segment I 0.59, basal half light reddish brown, darkening to fuscous apically, segment II 1.35, dark reddish brown, very slightly expanded distally; labium damaged distally. PRONOTUM. Posterior width 1.90. HEMELYTRA. Dark coloration on corium and clavus more brownish black. LEGS. Femora yellowish brown, tinged with red; tibiae brown; tarsi brown or brownish yellow. GENITALIA. Figure 38. FEMALE. Length 5.50; embolium less extensively pale than for male.

ETYMOLOGY: Named for the type locality; a noun in apposition.

DISTRIBUTION: Burma (fig. 36).

HOLOTYPE ♂: BURMA: **Bhamo District:** Bhamo, Aug. 1885, Fea (Distant collection, 1911-383) (BMNH). The above specimen was incorrectly identified as *malayensis* by W. L. Distant in the early 1900s. It also seems to be the specimen upon which Poppius (1912a) based a redescription of *malayensis.*

ADDITIONAL SPECIMEN: INDIA: 1♀, [port interception with no specific locality data], July 22, 1939, "on *Vanda*" (USNM). This specimen appears conspecific with the type (same dorsal coloration, prominent tylus, and second antennal segment), but a male example is needed for positive identification.

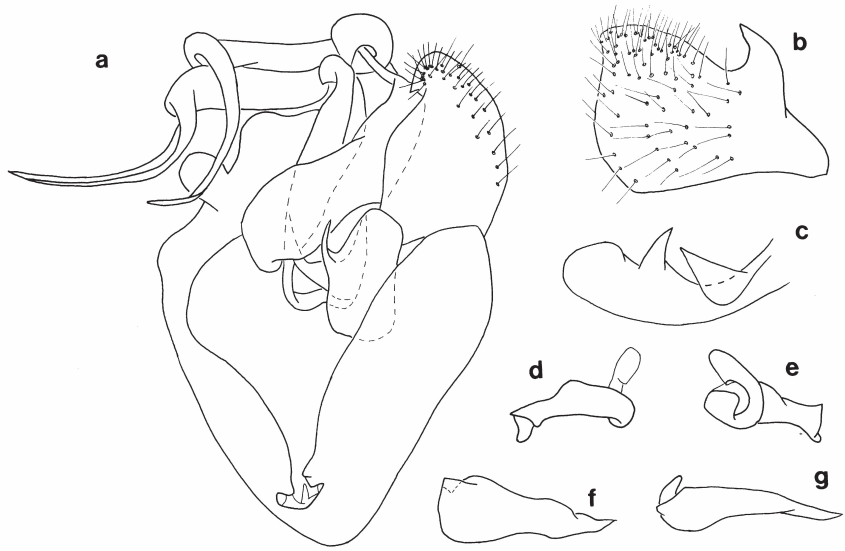

Fig. 38. Male genitalia of *Mertila bhamo.* **a.** Genital capsule, posterior view. **b, c.** Right lateral lobe of genital capsule. b. Lateral view. c. Dorsal view. **d, e.** Left paramere. d. Lateral view. e. Posterior view. **f, g.** Right paramere. f. Lateral view. g. Dorsal view.

Fig. 1.3. Typical page from a revision, including diagnosis, description, holotype designation, locality data, and figures of structures important in characterizing a taxon, in this case described as new (from Stonedahl, 1988: 37, 38; courtesy of The American Museum of Natural History).

species and the higher taxa into which they are grouped but also the more detailed inquiry into the structural attributes (morphology, anatomy) of those organisms. The larger and more comprehensive publications of this type are often called *monographs* or *revisions* (Fig. 1.3). They have sometimes appeared as books, particularly before about 1840, but after that time more commonly as journal articles, the periodical literature of science.

Today there are thousands of journals that publish myriad articles on systematics. Many of these publications focus on a single group of organisms; others are restricted geographically; and still others may publish systematic papers among a broad spectrum of other scientific articles. Summaries of the descriptive literature often become available to the general public in the form of *handbooks, field guides, faunas, floras* and similar sources that are written in a more easily understood fashion and present information in a more distilled manner. These secondary contributions, while attractive and functional, are often neither exhaustively researched nor peer reviewed and may contain nomenclatural or identification errors. Such works generally should not contain formal descriptions of new taxa or taxonomic revisions.

Catalogs and Checklists

Comprehension of the literature dealing with animals and plants is a formidable task simply because of the sheer volume. This gulf is bridged by publications that are often referred to as *catalogs* (Fig 1.4) and *checklists.* The exact form differs from group to group, but the general type of information contained in them is the same.

In botany, the historically most important source of this type is the *Index Kewensis,* which lists the names and place of publication of all seed-plant taxa at the family level and below. A new supplement is issued every five years. The work was started by Joseph Dalton Hooker, then Director of the Royal Botanic Garden at Kew; the original four volumes were prepared with funds provided by Charles Darwin. The entire catalog, containing approximately 900,000 names, is now available on CD-ROM (International Plant Names Index, 2004) and also searchable on the World Wide Web (hereafter, Web). Compact, readily available sources for the names of most plant genera are Willis (1973), Wielgorskaya (1995), and Mabberley (2008). *The Kew Record of Taxonomic Literature* (http://kbd.kew.org/kbd/searchpage.do) is an additional valuable source for locating botanical literature.The situation in zoology is more complicated, and no single source will serve for all groups; indeed, no definitive works exist for many groups. Nonetheless, one will find world or regional catalogs or checklists for many groups of animals, these works usually providing information on names, distributions, and, often, including extensive lists of sources from which the information was derived. Examples include Eschmeyer (1990) for fishes, Sibley and Monroe (1990) for birds, and Wilson and Reeder (1993) for mammals. For many less well-known groups, it may be possible to find only a listing for Western Europe—if the groups occur there.

Gen. **Cyclosternum** Ausserer, 1871

♂♀ **kochi** (Ausserer, 1871) Venezuela
C. k. Schmidt, 1993d: 62, f. 55–56 (♂).

♀ **longipes** (Schiapelli & Gerschman, 1945) Venezuela
C. l. Schmidt, 1993d: 62, f. 51 (♀).

♀ **obesum** (Simon, 1892) Brazil
Magulla obesa Gerschman & Schiapelli, 1973b: 75, f. 14–15 (♀).
C. o. Schmidt, 1993d: 62, f. 50 (♀).

♂ **rufohirtum** (Simon, 1889) Venezuela
Adranochelia rufohirta Gerschman & Schiapelli, 1973b: 62, f. 74–78 (♂).
C. r. Schmidt, 1993d: 62, f. 57–60 (♂).

♂♀ **schmardae** Ausserer, 1871 Colombia, Ecuador
C. s. Bücherl, Timotheo & Lucas, 1971: 124, f. 26–27 (♂).
C. s. Gerschman & Schiapelli, 1973b: 67, f. 68–73 (♂♀).
C. s. Schmidt, 1993d: 62, f. 52–54 (♂♀).

♂♀ **stylipum** Valerio, 1982 Costa Rica, Panama
C. s. Nentwig, 1993: 95, f. 40a–d (♂♀).

♂♀ **symmetricum** (Bücherl, 1949) Brazil
Magulla symmetrica Bücherl, 1950: 1, f. 1–3 (D♂).
Magulla symmetrica Bücherl, 1957: 391, f. 36–36a (♂).
C. s. Schmidt, 1993d: 62, f. 61–63 (♂♀).

Gen. **Cyriocosmus** Simon, 1903

♂♀ **elegans** (Simon, 1889) Venezuela, Brazil, Bolivia
C. e. Schiapelli & Gerschman, 1945: 181, pl. VIII (D♂).
C. e. Schenkel, 1953a: 3, f. 3a–c (♂).
Pseudohomoeomma fasciatum Bücherl, 1957: 391, f. 38–38a (♂).
Pseudohomoeomma fasciatum Bücherl, Timotheo & Lucas, 1971: 125, f. 35–37 (♂♀).
Chaetorrhombus semifasciatus Bücherl, Timotheo & Lucas, 1971: 126, f. 42–43 (♀).

♂♀ **sellatus** (Simon, 1889) Brazil
C. s. Gerschman & Schiapelli, 1973b: 67, f. 16–22 (♂♀).
C. s. Schiapelli & Gerschman, 1973b: 65, f. 1–4, 16–18 (♂♀).
C. s. Schmidt, 1993d: 63, f. 64–67 (♂♀).

Gen. **Cyrtopholis** Simon, 1892

Transferred to other genera:
C. cyanea Rudloff, 1994 – see **Citharacanthus.**

♂ **agilis** Pocock, 1903 Hispaniola
C. a. Bryant, 1948b: 337, f. 6–7 (♂).

Fig. 1.4. Partial listing from a systematic catalog, in this case of the spider family Theraphosidae (Platnick, 1997). This catalog includes for each taxon information on placement in the classification, name used, sexes known, figures published, distributional information, and the literature references containing these data.

The type of structured information contained in catalogs lends itself to preparation in the form of computer databases, and these are becoming available at an increasing rate through major museums and international initiatives such as the Global Biodiversity Information Facility (GBIF, 2007). Creating and using computer databases will be discussed further in Chapter 7.

Theoretical Literature

Most scientific fields have technical journals that deal with the methods of the discipline. Systematics is no exception. The oldest such journal is *Systematic Biology* (*Systematic Zoology* prior to 1991) published by the Society of Systematic Biologists. This journal has included, since its inception in 1952, many important articles pertinent to both zoology and botany. *Cladistics,* published by the Willi Hennig Society, is largely a journal of papers on methods, although like *Systematic Biology,* it also publishes articles on the classification of particular groups of organisms.

Taxon, published by the International Association for Plant Taxonomy, publishes articles of general interest to systematic botanists, including "official commentary" on botanical nomenclature. *Systematic Botany,* published by the American Society of Plant Taxonomists, includes articles of broad general interest to systematists as well as articles dealing more strictly with the details of plant classification.

A number of other journals such as the *Biological Journal of the Linnaean Society, Journal of Zoological Systematics and Evolutionary Research* (formerly *Zeitschrift für Zoologische Systematik und Evolutionsforschung*), *Systematics and Biodiversity, Zoologica Scripta,* and occasional symposium or edited volumes also publish articles on the theory and methods of systematics.

The burgeoning study of molecular data applicable to systematics has spawned a number of journals, including *Journal of Molecular Evolution, Molecular Biology and Evolution,* and *Molecular Phylogenetics and Evolution.* These journals deal mainly with the results of molecular studies and the analysis of molecular data.

Textbooks

Since the appearance of Hennig's *Phylogenetic Systematics* in 1966, a number of book-length "essays" on systematics have appeared. Each has its own strengths, but most are now somewhat dated because of advances in the field, particularly the in use of numerical methods. A selection of these books is listed at the end of the chapter under Suggested Readings.

Abstracting and Indexing Sources

If the numbers of animal taxa are at times almost overwhelming, so are the numbers of papers published on them. This was well recognized in the last century and was the reason for starting the *Zoological Record,* an annual digest of the literature

on animals, first published in 1864. This basic reference is available in most research libraries. At the time of its inception, the organization of the *Zoological Record* contained a bibliography whose cited articles were indexed primarily for their systematic contents. Now many additional subject areas are indexed.

Biological Abstracts began publication in 1926. Unlike the *Zoological Record, Biological Abstracts* publishes summaries of articles and books appearing in the primary biological literature. The major themes of published articles are also indexed.

Literature on fossil vertebrates is summarized in the works of Hay (1902), Romer (1962), and the ongoing *Bibliography of Fossil Vertebrates* published by the Society of Vertebrate Paleontology. Additional abstracting sources exist for agriculture and other fields; these are often valuable sources for the more strongly applied literature.

Computer searches of the *Zoological Record* are now possible for all records from the inception of publication in 1864. Many research institutions subscribe to online indexing services, such as the ISI Web of Knowledge (Thomson Reuters, 2007), that contain searchable databases of literature from the past thirty years. The catalogs of major research libraries, most of which now exist in database format, can also often be searched locally or via the Internet, offering additional sources of information on the systematic literature.

Resources on the Internet

The Web is a tremendous asset for science, for it allows instantaneous searching for, access to, and dissemination of information without the time and expense of traditional mail or trips to the library. In addition, Web-based resources can be updated as new information becomes available, while traditionally published media are static. A growing body of historical literature is being scanned to digital format and made freely available on the Web as PDF files, either by the societies that publish particular journals, museums and libraries (www.biodiversitylibrary.org/About.aspx), or via omnibus digitization efforts like Google Scholar. Most present-day systematists are actively engaged in posting the results of their work on the Web either on personal or institutional Web sites, on taxon-oriented Web sites, or on more general repositories of taxonomic information. Two repositories that present information in a phylogenetic context are the Tree of Life Web Project (Maddison and Schultz, 1996–2008), a collaborative effort to graphically display the hierarchy of life in an interactive format, and TreeBASE (Piel et al., 2007), a database of phylogenetic data matrices and results from a variety of published sources. The U.S. government's National Center for Biotechnology Information Web site (NCBI, 2008), is the repository for most published DNA sequence data employed in phylogenetic studies. Sources that provide "authority files" of nomenclatural information include, among others, the Integrated Taxonomic Information System (ITIS; www.ITIS.gov) and Species2000 (www.sp2000.org). Another—uBio (www.uBio.org)—provides an archive of biological information through the

process of indexing biological information found on the Web and placing it in a nomenclatural context. Several additional sites serve as "Web aggregators," drawing information from a wide variety of sites and presenting it a unified context. These include GBIF (Global Biodiversity Information Facility; www.gbif.org), which serves as a portal to a consortium of member sites, and DiscoverLife (www.discoverlife.org), which presents nomenclatural information, images, electronic keys, specimen data, and real-time mapping with a level of integration that none of its individual collaborating information providers is able to achieve. See further discussion and documentation in Chapter 7 under Systematic Databases.

Systematic Collections

Systematic collections serve as repositories for specimens in the same way that libraries serve as repositories for documents. The most important and broad-ranging natural history collections are in large public museums, most of these being in Europe and North America. No museum has representatives of all species, but each has its strengths. Thus, it is part of the training and experience of systematists specializing on a given group to learn the repositories of specimens important to their work.

The *Index Herbariorum* (Holmgren and Holmgren, 1998) is a searchable database of the world's herbaria, with a description of their collections, staff, and links to further information. Extensive search criteria make finding information on the deposition of plant collections and the specialists who work on them relatively straightforward.

The situation in zoology is much more complicated. Although published directories exist for workers in some groups, many such directories are badly out of date. Likewise, there are few comprehensive published listings of museum holdings. Thus, students in zoology wishing to learn who is working on a certain group or where relevant material is deposited should first consult their librarian or a specialist in the group for resource guides. If no useful sources are found, information must be acquired on a more piecemeal basis, through perusal of the primary literature, through experience, and through word of mouth.

We will see dramatic changes in our ability to acquire information on collections for both botany and zoology in the coming years. Partial lists of specimen holdings are now available on the Web for some collections, and the number is increasing on a daily basis. Thus, the Internet is beginning to allow for discovery of sources on a much more rapid and efficient basis than has heretofore been possible.

Suggested Readings

Blackwelder, R. E. 1967. *Taxonomy: A Text and Reference Book.* John Wiley and Sons, New York. 698 pp. [An interesting counterpoint to Mayr, Linsley, and Usinger, 1953]

Crowson, R. L. 1970. *Classification and Biology.* Aldine Publishing Co., Chicago. 350 pp. [An independently conceived exposition on the thought process and methods in biological classification with many conclusions similar to those of Hennig]

Eldredge, N., and J. Cracraft. 1980. *Phylogenetic Patterns and the Evolutionary Process.* Columbia University Press, New York. 349 pp. [Essay on cladistics and its relationship with the study of evolution]

McKenna, M. C., and S. K. Bell. 1997. *Classification of Mammals above the Species Level.* Columbia University Press, New York. 535 pp. [Part I includes comments on the history and theory of classification]

Nelson, G. 1989. Species and taxa. pp. 60–81. *In:* Otte, D., and J. A. Endler (eds.), *Speciation and Its Consequences.* Sinauer Associates, Inc., Sunderland, Massachusetts. [A lively discussion of species and cladistics]

Nelson, G., and N. Platnick. 1981. *Systematics and Biogeography: Cladistics and Vicariance.* Columbia University Press, New York. 567 pp. [Chapter 2 is a readable and stimulating review of the history of systematic thought]

Panchen, A. L. 1992. *Classification, Evolution, and the Nature of Biology.* Cambridge University Press, Cambridge. 403 pp. [A compelling historical and philosophical review of the development of modern systematic theory]

Schoch, R. M. 1986. *Phylogeny Reconstruction in Paleontology.* Van Norstrand Reinhold Co., New York. 353 pp. [Excellent literature review of cladistics, with special reference to paleontology]

Wägele, J.-W. 2005. *Foundations of Phylogenetic Systematics.* Verlag Dr. Friedrich Pfeil, Munich. 365 pp. [A Germanic view of phylogenetics]

Wiley, E. O. 1981. *Phylogenetics: The Theory and Practice of Phylogenetic Systematics.* John Wiley and Sons, New York. 439 pp. [An early, and still useful, textbook on the methods of phylogenetic analysis and other aspects of systematics]

Wiley, E. O., D. Siegel-Causey, D. R. Brooks, and V. A. Funk. 1991. *The Compleat Cladist: A Primer of Phylogenetic Procedures.* University of Kansas Museum of Natural History, Lawrence, KS. [A workbook of basic cladistic methods; also available as a PDF on the Web]

Williams, D. M., and M. C. Ebach. 2008. *Foundations of Systematics and Biogeography.* Springer, New York.

Williams, D. M., and P. L. Forey (eds.). 2004. *Milestones in Systematics.* The Systematics Association Special Volume Series. CRC Press, Boca Raton, FL. 290 pp. [A series of essays addressing various topics from a historical perspective]

Winston, J. E. 1999. *Describing Species.* Columbia University Press, New York. 518 pp. [A how-to manual for alpha taxonomy]

2

Systematics and the Philosophy of Science

Objective Knowledge versus Truth in Science

Science, including systematics, deals with the acquisition of knowledge concerning the natural world. Yet, the path from basic observation to "knowledge" is neither direct nor obvious. Nevertheless, many scientists are content to gather and interpret evidence within an established theoretical framework as "facts," without questioning underlying assumptions. The methods of "normal science" are not directly concerned with how we judge the truthfulness of the knowledge we acquire, what ideas represent mere conjecture and which represent knowledge, and whether or not we can trust our observations of the real world. Philosophy as a field of inquiry may help us to gain understanding of these issues. Some would say that within philosophy it is *epistemology*—the inquiry into the origin, nature, and limits of knowledge—that defines science. Thus, it is to this area that we now turn.

The terms *fact* and *theory* are often juxtaposed in common parlance, the former connoting a kind of certainty that the latter does not have. Thus, the theory of evolution is often disparaged as "only a theory" by those who would supplement or supplant it with creationist accounts in U.S. school curricula. Ideas in science are often referred to as *theories,* or *hypotheses,* terms whose meanings will be used interchangeably in this book, even though *theory* is often used in reference to more general concepts than is *hypothesis.* Theories and hypotheses are ideas to be critically evaluated. Nonetheless, the term "truth" is frequently used in the popular press when referring to scientific statements, and it is sometimes encountered in the writings of scientists themselves—and philosophers. Science produces what might be referred to as "objective knowledge." The question of whether such knowledge is, or can ever be, absolutely truthful is beyond the scope of this work. We might observe, however, that belief in absolute truth would seem to involve an act of faith, an approach to the acquisition of knowledge that science does not admit. Thus, in this book, all scientific statements will be treated as hypothetical, albeit some of them receiving stronger support from the available evidence than others.

Some examples may help put this issue of absolute truth into perspective. Few people in this day and age would doubt the correctness of Copernicus' heliocentric theory of our solar system. Indeed, most would probably consider the idea that the earth (and the other planets) revolve around the sun to be irrefutable. Nonetheless, the Ptolemaic theory in which the earth was fixed in the center of the universe with the sun, planets, and stars rotating around it, was so widely believed—after centuries of detailed observation—and so entrenched in church dogma that the Copernican theory was not generally accepted until the eighteenth century, more than two centuries after Copernicus' death.

Within biology, it is commonly said that biological evolution has been shown to be a fact. Probably few—except those who believe in a literal interpretation of divine creation—would deny that life on earth has evolved. Yet, the exact mechanisms allowing for the diversity of forms we see in the fossil record and living today are still the subject of considerable controversy. The "fact" of evolution may appear manifest in the changing representation of taxa found in the fossil record through time, and it seems to be further confirmed by the hierarchic relationships observable among taxa, both living and fossil. But, even though the generalities of these issues may appear to be "factual," our detailed understanding of them—both phylogenetic and mechanistic—is far from being incontrovertibly resolved.

We might consider for the moment the issue of bird–dinosaur relationships. It is commonly said that dinosaurs went extinct at the end of the Cretaceous period, some 65 million years ago. Yet, a widely accepted current theory based on cladistic studies indicates that birds find their closest relatives in the Theropoda, a subgroup of saurischian dinosaurs, suggesting extinction only of dinosaur lineages other than birds (Dingus and Rowe, 1998). Thus, what was not so long ago thought to be a fact is now widely regarded as a rejected theory. While many clades of dinosaurs are extinct, one lineage from among them exists as birds!

Knowledge of issues such as how (and whether) life has evolved, and whether all dinosaurs went extinct 65 million years ago is not acquired simply as the result of observation. Evolutionary transformations are not events we can observe on a daily basis, nor were we born with a preformed concept of dinosaur. These ideas represent scientific theories that devolved from more than two centuries of concerted observation, analysis, and synthesis on the part of biologists, geologists, and others interested in the natural world.

Prior to the early 1970s, most of the literature on *systematics* made no mention of the terms hypothesis or theory and said little about what a systematic theory might be. Neither did that literature suggest how theories might be tested or evaluated. Most scientists have probably never concerned themselves directly with issues related to the philosophy of science. Gaffney (1979a) prepared one of the first truly useful expositions on the subject, and one that is still timely and eminently readable.

It has been said that systematics is something you do, not something you think about. Although much useful work has been performed in that vein, such an anti-intellectual viewpoint ignores at its peril the potential importance of inquiry into

the scientific thought process itself. The philosophy of science, nonetheless, might have retained its apparent irrelevance to the field of systematics had it not been for the rise—in the middle of the twentieth century—and subsequent clash of two divergent methodologies and concomitant philosophies for the empirical practice of systematics discussed in Chapter 1, phenetics and cladistics.

With regard to the role of methods in science, Platnick (1979:538) observed:

> It may seem paradoxical that systematics (or any science) must adopt methods without being able to attest to their efficacy. But the fact is that we use our methods in an attempt to solve problems. If we already knew the correct solutions to those problems, we could easily evaluate and choose among various methodologies: those methods which provide the correct solutions would obviously be preferred. But of course, if we already knew the correct solutions, we would have no need for the methods.

The point of view espoused by Platnick seems not to be universally appreciated nor accepted by those interested in the study of systematics. For this reason we will examine some general and specific implications of this conundrum.

Scientific Theories and the Concept of Falsifiability

Approaches to science are often divided into the inductive and the deductive. The *inductive* approach holds that scientific knowledge accumulates from repeated observation of the facts. Induction might be defined, alternatively, as a process in which scientific inference leads from the specific to the general. This approach, usually attributed to the sixteenth-century English philosopher Francis Bacon, has long been considered a basic method of science. The noted philosopher of science Karl Popper (1968:29), quoted German philosopher Hans Reichenbach, as saying that "the principle of induction is unreservedly accepted by the whole of science and . . . no man can seriously doubt this principle in everyday life either." Similar expressions of belief are widely scattered in the philosophical, scientific, and popular literature.

The perspective that "elementary statements of experience" and "judgments of perception" are to be treated as scientific is labeled by Popper as "positivist" and is directly equivalent with induction. In this inductivist—or positivist—perspective, observations are treated as facts. By extrapolation, if a large number of elementary observations are judged to be true, then statements that summarize general agreement among them must also be true. We have referred to *positivism* as exemplified by the phenetic school of thought as "extreme empiricism" in Chapter 1.

The *deductive* approach, in contradistinction to the inductive approach, holds that all observation should be construed as theoretical or, stated another way, all observations are theory laden. To paraphrase Rieppel (1988), observation and the search for lawful regularities can never be unbiased. Observation must be based on some expectation; research is expected to reveal something of significance,

something worth recording. That significance can derive only from some theoretical context.

The hypothetico-deductive view of science holds that the growth of knowledge derives from the formulation of theories that imply certain predictions (deductions) that can be judged by observation. These observations represent tests of the theory. The observations that conform to the deductions are said to *corroborate* the theory; those that do not are said to *falsify* it. The greater and more severe the number of tests passed, the greater the degree of corroboration. A single nonconforming observation may be persuasive as reason to reject the theory (but see below).

A major distinction between the inductive and deductive approaches would seem to revolve around the concept of "truth" and how we can determine what is true and what is not. You might say, "Well, let's first agree on the observational aspects before we move on to the more elaborate theories that purport to summarize the simplest observations, and then we will know whether we are right or not."

In his attempts to solve what he called the "problem of induction," Popper reasoned that "falsifiability" was the only suitable criterion of demarcation between science and non-science because logically there was no way to decide whether a given statement was absolutely truthful. As eighteenth-century British philosopher David Hume observed long ago, no number of singular statements will prove the truth of a universal statement. For example, we could not be certain that the statement "all insects have compound eyes" was absolutely true, no matter how many observations we might have made, because we can never observe all insects in all of time. However, the absolute truthfulness of the statement could easily be rejected by finding a single insect without compound eyes. Thus, even if we could all agree on the truthfulness of our observations—the singular statements—we would still have no rationale for believing that a more general or "universal" statement is true. Instead, one nonconforming observation or singular statement could suggest that the universal statement was false. Popper drew a distinction between *strictly* universal statements, which apply to all instances for all time, and *numerically* universal statements, which apply to entities restricted in space and time. Popper viewed the latter as conjunctions of singular statements that are in principle both verifiable and falsifiable. Thus, to Popper, only strictly universal statements are scientific.

The issue of whether systematic statements are strictly universal or not, and whether they can therefore be validly tested using the methods described by Popper—as some philosophers would demand—is an issue that has been much discussed but certainly not resolved in the form of anything that could be called a consensus. Given our example of insects and compound eyes above, some might argue that since insects occur in finite, albeit large, numbers, the prediction about compound eyes therefore represents a numerically universal statement, outside Popper's demarcation of science. Of course, the same could be said of atoms of gold in the universe, or any other assemblage of "real" things. A widespread belief among interested biologists seems to be that the requirement of strict universality is largely irrelevant; even Popper, who was well aware of the application of his

philosophy of science in systematic biology, never claimed that it was inappropriate. Although some of his earlier writings were critical of historical sciences (e.g., Popper, 1957), toward the end of his life, Popper specifically dismissed the claim that evolution is a "metaphysical research program" and admitted comparative biology inside his demarcation of "science" (Popper, 1980).

The deductive method of testing, which has also been called the "falsificationist approach to science," suggests that theories can be tested in the following ways (Popper, 1968):

1. Logical consistency, whereby the conclusions are compared among themselves;
2. Investigation of the logical form of the theory to determine whether in fact it is an empirical or scientific theory;
3. Comparison with other theories to determine whether a given theory would represent a scientific advance;
4. Empirical testing of conclusions (deductions) from the theory.

Empirical testing is probably the most important for our purposes, although the others are also relevant. Failure of empirical observations to support the predictions of a theory would suggest that the theory has been *falsified.* Observations that match predictions would *corroborate* the theory.

Popper (1968) pointed out that there is no truth in science, and that one should not equate degree of corroboration with truthfulness. For example, one would not say "A theory is hardly true so far" or that "it is still false" simply because it had not been rigorously tested. Popper also rejected the idea that the truthfulness of a statement can be interpreted in the sense of the probability of that statement being true. According to Popper, "The advance of science is not due to the fact that more and more perceptual experiences accumulate in the course of time. Nor is it due to the fact that we are making ever better use of our senses." Science is rather a matter of conjecture and refutation.

In Popper's view, degree of corroboration is directly related to the degree to which a hypothesis has survived attempts to falsify it. Any hypothesis that by virtue of its formulation conforms to any and all observations is not highly corroborated but rather immunized at the outset from critical testing. *Degree of corroboration is a relative quantity, the choice being among hypotheses, not the degree to which a given hypothesis is corroborated in its own right.*

In applying the deductive approach, we might adopt the following methodological rules as outlined by Popper in *The Logic of Scientific Discovery* (1968):

1. Science is in principle without end. Once you decide on the absolute truth, you retire from the game.

> Of course, the individual scientist may wish to establish his [or her] theory rather than refute it. But from the point of view of progress in science, this wish can easily mislead him [or her]. Moreover, if he does not himself examine his favourite theory

> critically, others will do so for him. The only results which will be regarded by them as supporting the theory will be the failures of interesting attempts to refute it; failures to find counter-examples where such counter-examples would be most expected, in light of the best of the competing theories." (Popper, 1975:78)

2. A corroborated hypothesis should not be dropped without reason, that is, without a stronger competing hypothesis.
3. Parsimony should be applied in the testing of hypotheses. That is, *ad hoc assumptions* [special pleading] designed to dispose of observations that would otherwise provide evidence against a theory should be avoided.

It is the last of the rules—parsimony—that has assumed greatest importance in modern systematic practice. We will therefore discuss the idea in its own right.

Parsimony and Ad Hoc Hypotheses

Parsimony as an approach to evaluating observations is often attributed to fourteenth-century English philosopher William of Occam (or Ockham) and referred to as Occam's Razor. It is a widely appreciated approach in science, according to which the number of assumptions required to explain observations should be minimized. Extra assumptions beyond the minimum necessary are often referred to as "ad hoc." The use of parsimony was obvious in the original formulation of phylogenetic methods by Hennig, although Hennig never used the term, and he did not refer to Occam's Razor. As pointed out by Farris (1983), parsimony as a methodological criterion is evident in Hennig's "auxiliary principle," which states that origin by convergence should not be assumed a priori (see Hennig, 1966:121). An alternative formulation might be that a single origin for similar structures and behaviors in different organisms should be presumed in the absence of evidence to the contrary. As noted by Farris (1983:12):

> Hennig's defense of the synapomorphy principle by recourse to parsimony [via his auxiliary principle] is not accidental but necessary. . . . Superficially, the use of the synapomorphy principle in phylogenetic inference seems to be just a consequence of the logical connection between true synapomorphies and genealogies, but it cannot be just that, as the connection of that logic—that the traits are indeed synapomorphies—need not be met. Grouping by synapomorphy is instead a consequence of the parsimony criterion.

Hennig addressed the problems of disagreement among characters through the "method of checking, correcting, and rechecking," in an attempt to maximize congruence among character distributions. This approach has been labeled "circular" by some because they say the process allows for the possibility of bringing observations into agreement simply for the sake of doing so, with the ultimate aim of salvaging a favored theory.

Hennig's approach has merit for the same reasons that it has been criticized. First, there is no reason to believe that initial observations are always accurate and not in need of rechecking and corroboration. This point of view derives from the idea that all observation is theory laden, and in the case of systematic character data—the theories of homology and transformation discussed in Chapters 3 and 4—may be influenced by prior observations. Recall, for example, the complex structures in figure 1.3. The parameres and other parts could be described in many different ways, as one complex character or many independent characters, and those decisions might be influenced by the conditions of those structures in other taxa. Second, it is only the agreement among observations that corroborates initial hypotheses of homology, and rechecking observations can be defended as a test of preliminary theories of homology as opposed to manipulation of data (Rieppel and Kearney, 2002, 2007).

Characters or character data have frequently been referred to in the literature as "good" or "strong," on what can only be regarded as subjective grounds. For example, structurally complex characters have been deemed more reliable indicators of relationships than less complex characters, on the assumption that it is hard to imagine them evolving more than once. Conversely, structurally "simple" characters have at times been relegated to a lesser status simply because they lack complexity of form. Functional significance has also played a role in judging the value of characters in some phylogenetic analyses (a tradition stemming from Cuvier's subordination of characters; Appel, 1987). Furthermore, certain character systems have attracted the attention of some authors because these authors were trained in the techniques that reveal them, and they have therefore judged them more important than other types of characters. The ongoing development of the logic of phylogenetic systematics has brought into question all of these arguments because of their necessarily subjective quality. Each argument places a differential value on information, a priori, rather than examining its agreement with other data.

The strength of a character in systematics is judged by two factors: consistency and congruence.

Consistency refers to the degree with which a character agrees with a given phylogenetic topology. Note that this is not the same as statistical consistency, a separate property that will be addressed in Chapter 5. A frequently used measure of character consistency is the *consistency index,* which is the ratio of observed changes relative to the minimum possible number of changes required for the character(s) to fit the topology (see Chapter 6 for further discussion).

Congruence refers to the degree with which distributions of individual characters agree with one another. This property has sometimes been described using other terms such as "concordance" or "consilience." The strength of a given theory (in this case a character) derives from (1) the degree to which it is corroborated through repeated observation and (2) its conformity with observations on other characters.

These approaches to judging character data represent direct applications of the parsimony criterion.

Sidebar 3
Dichotomy As Part of the Method

Hennig's methods, in their original exposition, strongly implied the desirability of arriving at completely dichotomous phylogenetic schemes. This idea was almost immediately construed as meaning that the methods of phylogenetic systematics only worked if speciation were actually dichotomous. Yet, Hennig was quick to point out that we desire dichotomous schemes only because they imply more informative hypotheses of relationships. Thus, the idea of dichotomous branching says nothing about the manner in which evolution actually proceeds, but only how to get the most information out of our data. The nodes in cladograms do not represent speciation events, but rather groupings based on character information.

As stated by Hennig (1966:209),

> Strange to say, the view is often advanced that phylogenetic systematics presupposes a dichotomous structure of the phylogenetic tree. Because dichotomy is not the rule, it is said that a system that gives the impression of a continuously dichotomous differentiation cannot be regarded as a true presentation of actual kinship relations. If phylogenetic systematics starts out from a dichotomous differentiation of the phylogenetic tree, this is primarily no more than a methodological principle.... A priori it is very improbable that a stem [ancestral] species actually disintegrates into several daughter [descendant] species at once, but here phylogenetic systematics is up against the limits of solubility of problems.

Subsequently, the terms *trichotomy* (three branches) and *polytomy* (more than three branches) have become widely used when referring to nondichotomous branching patterns in cladograms. These usually imply either a lack of evidence or equivocal evidence supporting a dichotomous resolution of the node in question—so-called soft polytomies (as opposed to "hard" polytomies that denote a simultaneous multifurcation, or evolutionary radiation, of the taxa stemming from the node).

The Popperian Approach to Systematics

Criticisms

Popper constructed much of his discussion of scientific methods as if it applied to the physical and experimental sciences, although Popper's criticisms of positivism did not derive from an examination of the physical sciences. Substantial commentary exists in the literature suggesting the Popperian view of science requires "lawlike" qualities of "process" theories (Hull, 1983:178; Stamos, 1996) and thus

cannot be applied to systematic biology. This view can be shown to rest on a mistaken understanding of the nature of theory and test in systematic biology, as we will discuss below under The Basis of Systematic Knowledge. If, as he himself stated, the purpose of Popper's writings was to distinguish between science and non-science, then to conclude that his methods are inapplicable to systematics would be to conclude that systematics is not scientific or that there is more than one kind of science.

The Popperian approach to systematics has also been criticized as representing absolute or naive falsificationism. This criticism points out that the falsificationist approach fails to recognize that observation itself is subject to error and interpretation, or more specifically, that in order for a hypothesis to be falsified, the falsifying evidence itself must be accepted as "true" (Lakatos, 1974). With respect to systematics, critics argue that the variability inherent in most biological systems is not taken into account by those who apply Popper's methods. Under the absolute interpretation of falsification, a theory for which any contrary evidence is adduced would be absolutely and forever discarded without consideration of the preponderance of evidence.

As an example, we might consider the statement "all pterygote insects have wings." Finding a pterygote insect without wings, such as an ant, would reject the theory under the absolute falsificationist perspective, even though many other attributes clearly suggest that some nonwinged organisms are pterygote insects. Such an extreme approach would not attempt to minimize the number of ad hoc statements necessary to salvage our best available theory but rather reject it because of a single nonconforming observation. Is it better to conclude that an ant is not a pterygote insect, or that it is a pterygote insect that has had a secondary loss of its wings? We infer, based on many other characters, that ants belong to a group of alate insects and even observe that some ants have dehiscent wings. The "absolute falsificationist" criticism seems as much a label as an argument and has been advanced by those intent on rejecting the deductive approach, by whatever means.

Neither the argument that systematics and other biological disciplines are not "science" nor the argument that the existence of homoplasy makes falsificationism impossible strikes a substantive blow to the empirical basis of systematics or to what has actually taken place in the application of the Popperian approach. Upon examination of the literature, one will find numerous applications of the deductive approach in systematics, but few if any applications of absolute falsificationism. We can identify at least three issues beneficial to the development of systematics as a science that derive at least in part from critical attempts to apply the deductive approach.

Benefits

First, whereas previously it was at best unclear what represented hypotheses to be judged (tested) in systematics, it is now abundantly clear that systematic

hypotheses are characters and the alternative hierarchic schemes of relationships they imply. Characters represent lower-level theories closely associated with the realm of observation and the formulation of ideas concerning homology. Hierarchic schemes of relationships represent higher-level theories that are tested with the lower-level character theories. Failure of agreement between theory and observation, formerly explained away with ad hoc hypotheses, is now adjudicated via the parsimony criterion in the search for theories of relationships among taxa that show greatest agreement with available data. It should be noted that "parsimony" as used here does not connote the cladistic method in particular: any systematic method that applies an optimality criterion to select among alternative taxonomic hypotheses employs parsimony to favor superior hypotheses over inferior ones (see Brower, 2002).

Second, the meaning of prediction in systematics was long muddled, notwithstanding its central place in characterizing the "power" of science. For example, Bock (1974) tried to establish a relationship between classical evolutionary taxonomy and the philosophy of Karl Popper, but at the time was decidedly unclear on the issues of prediction and testing. More recently, Mayr (1988:19) seemed equally unclear when he stated that a belief in universal laws implies a belief in absolute prediction and that because of the pluralism of causations and solutions in biology, prediction is probabilistic, if possible at all. In spite of the views espoused by Bock and Mayr, *prediction* in systematics is now widely—if not universally—understood to mean the ability to predict the distributions of previously unobserved (unstudied) characters among taxa. For example, we would expect to see chemical compounds with properties similar to penicillin in molds that are closely related to *Penicillium chrysogenum.* The capacity to make such predictions provides the basis for chemical prospecting, a valuable research tool for the pharmaceutical industry. The strength of phylogenetic hypotheses is based not only on what predictions about character distributions can be made but also on what character distributions are prohibited. We can be quite sure, for example, that centaurs, dragons, and angels are imaginary beings because their duplicated forelimbs violate the tetrapod ground plan shared among all amniotes. Lest there be any lingering confusion, we reemphasize that prediction as applied in systematics does *not* refer to the forecasting of future evolutionary events, as has sometimes been suggested.

Third, the issue of how we judge the explanatory power of systematic theories through the application of parsimony has been clarified. Ad hoc hypotheses are minimized; congruence among character distributions is maximized. Thus, agreement between theory and observation is maximized (Farris, 1983).

What seems largely irrelevant in evaluating the deductive approach is whether or not all of the elements of current "evolutionary thinking" are embraced, whether a Popperian approach represents "absolute" falsificationism, and whether theories in systematics—and possibly biology more generally—can be of metaphysical origin. The prevalence of modern systematics and its applications in genetics, behavior, and ecology reveal the success of applying a Popperian approach to the interpretation of empirical comparative biology.

Engelmann and Wiley (1977) and Gaffney (1979a, 1979b) emphasized the significance of the falsifiability criterion in systematics, particularly in relation to paleontology. They noted that ancestor-descendant relationships, as commonly invoked in the paleontological literature, are not testable in the Popperian sense and that such "schemes" can only be labeled as scenarios. Gaffney (1979b) concluded—with regard to scenarios—that even though it would be wonderful to have testable hypotheses of (for example) selection pressure and adaptive zones for Devonian tetrapod vertebrates, we are constrained to construct classifications through the formulation of hypotheses testable with available information. Gaffney saw no data available for testing theories concerning selection pressures in the Devonian period (see further discussion in Chapter 4 under Ancestors, Sister Groups, and Age of Origin).

There are ongoing controversies among systematists, and even among cladists, over the meaning and relevance of the Popperian approach, with various authors elaborating criticisms, alternative philosophical schemes, and defenses of the views outlined in this chapter (e.g., de Queiroz and Poe, 2001, 2003; Faith and Trueman, 2001; Farris et al., 2001; Crother, 2002; Grant, 2002, Kluge, 2003; Rieppel, 2003, 2005a, 2007a; de Queiroz, 2004; Franz, 2005; Fitzhugh, 2006; Helfenbein and DeSalle, 2006; Kluge and Grant, 2006; Rieppel et al., 2006; Vogt, 2007). Although we will not explore these somewhat esoteric debates here, we encourage the interested reader to delve into the primary literature to gain an understanding of these varied points of view.

Statistics, Probability, and Models in the Historical Sciences

The application of parsimony in judging phylogenetic theories has been directly criticized on the grounds that evolution is not necessarily parsimonious. This argument suggests that we must know something about the nature of the products of evolution before we conduct the studies designed to reveal that knowledge. As with all scientific inquiry, parsimony is applied in systematics to minimize the number of ad hoc explanations of data or, stated in another way, to maximize the power of the hypothesis to explain those data. The current sense of its application is in no way related to models of evolution. Parsimony has to do solely with the interpretation of evidence. It is simply a methodological tool and makes no claims about the way things are in the world.

On the above view, cladistic parsimony might be said to be free of assumptions concerning evolutionary models. But this perspective is not unchallenged in the literature, either. For example, Sober (1983) stated that he believed parsimony contained presuppositions, and although he was unclear as to what they might be, it was his view that if the history of evolution violates them, then character distributions will not be usable in inferring phylogenies.

Swofford et al. (1996:426), in a hermeneutical discussion, asserted that parsimony does make assumptions and that the violation of these assumptions can

lead to problems. In their view, "The difficulty lies in stating precisely what the assumptions are." This statement apparently means that just because no authors have explicitly stated a set of assumptions for parsimony as a methodological criterion, there is no reason to suppose that such assumptions do not exist or that they will not eventually be discovered and stated. As a way of providing a boundary for what they believed to be the yet-unstated conditions implied in the application of parsimony, Swofford et al. went on to say that "At a minimum, acceptance of an optimal tree under the parsimony criterion requires one to assume that conditions that can cause parsimony to estimate an incorrect tree are unlikely to have occurred." The arguments of Sober and Swofford et al. seem to us to be no more compelling than Descartes' *genius malignus*—the idea that all of our "perceptions" might be figments placed in our heads by an evil demon. Yes, the evidence could be misleading in some absolute, metaphysical sense, and the hypothesis of relationships implied could be false with respect to the actual historical genealogy. But these are fundamentally untestable claims. The solipsist stands unassailable in his fortress, but neither can he sally forth, so we will pass him by.

Statements like those of Sober and Swofford et al. might also be interpreted as suggestions that no criteria exist for judging the results of parsimony analyses, whereas in reality the criterion is exactly that the data are explained with the minimum interpretation necessary. There are no confidence limits to be calculated for judging the truth content of a given hypothesis under the parsimony criterion. The standard of judgment is comparison with alternative hypotheses. The same is true for phylogenetic inferences based on maximum likelihood—the most likely tree is selected, even though its absolute likelihood is extremely low (Gatesy, 2007).

A final word on assumptions might best be made with another quote from the work of Farris (1983:35):

> Parsimony analysis is realistic, not because it makes just the right suppositions on the course of evolution. Rather, it consists exactly of avoiding uncorroborated suppositions whenever possible. To the devotee of supposition, to be sure, parsimony seems to presume very much indeed: that evolution is not irreversible, that rates of evolution are not constant, that all characters do not evolve according to identical stochastic processes, that one conclusion of homoplasy does not imply others. But parsimony does not suppose in advance that those possibilities are false—only that they are not already established. The use of parsimony depends just on the view that the truth of those—and any other—theories of evolution is an open question, subject to empirical investigation.

The viewpoint of Swofford et al. quoted above is directly associated with an argument originally propounded by Felsenstein (1978), who concluded that because parsimony did not provide the known "true" answer in simulations based on deterministic models of character evolution, parsimony must therefore be flawed

because it was "statistically inconsistent." *Inconsistency* is the statistical property that support for an incorrect result increases with the addition of data. It is possible to contrive a scenario in which parsimonious interpretation of a given data set does indeed support an incorrect topology. Felsenstein reasoned from this result that phylogenetic theories might better be judged on a statistical basis, through the use of a maximum likelihood approach (see further discussion of Maximum Likelihood in Chapter 5).

Farris (1983:17), in criticizing the application of a statistical approach such as maximum likelihood to phylogenetic inference, noted that it

> was wrong from the start, for it rests on the idea that to study phylogeny at all, one must first know in great detail how evolution has proceeded. That cannot very well be the way in which scientific knowledge is obtained. What we know of evolution must have been obtained by other means. Those means . . . can be no other than that phylogenetic theories are chosen, just as any scientific theory is, for their ability to explain available observations.

Felsenstein (1978:409) himself admitted that "The weakness of the maximum likelihood approach is that it requires us to have a probabilistic model of character evolution which we can believe. The uncertainties of interpretation of characters in systematics is so great that this will hardly ever be the case." Yet he asserted that the only true tests of the robustness of phylogenetic methods must be undertaken statistically, and that this goal must be pursued, even though "Establishing that robustness . . . by examining a wider range of models is a daunting task."

Parsimony was further impugned by Felsenstein (1981:194) because it "implicitly assume[s] very low rates of change"; in other words, parsimony assumes that relatively few evolutionary events have occurred in the diversification of a given group. Farris (1983:13) dispelled Felsenstein's argument, asking whether a "procedure that minimizes something must ipso facto presuppose that the quantity minimized is rare?" In refuting this notion, he used an example from statistics, pointing out that in regression analysis, just because the variance may be large, there is no reason to doubt that the regression line found is the best description of the data; one simply needs to expand the confidence limits to accommodate the variance. Subsequent empirical research (e.g., Källersjö et al., 1999) has supported Farris' theoretical claim by showing that even highly homoplastic data increase support for a phylogenetic hypothesis.

The statistical worldview would seem to suggest that we can construct some absolute measure of the goodness of phylogenetic hypotheses. That view of systematics, when applied as a criticism of parsimony, disregards the fact that parsimony procedures have always been applied as a way of judging the explanatory power of *alternative* hypotheses, not as a way of understanding the truthfulness of hypotheses in absolute or probabilistic terms.

Sidebar 4
"Phylogeny Reconstruction" versus Phylogenetic Inference

Throughout this book we have taken care to refer to representations of the relationships among taxa as "phylogenetic hypotheses," and the process of developing those hypotheses as "phylogenetic inference." All too frequently in the literature we see reference to "phylogenies" being "reconstructed" by this or that method. This terminology is objectionable, for the following reasons. First, *phylogeny* (or phylogenesis) refers to a process of branching diversification of taxa, just as *ontogeny* refers to the process of organismal development. Although we can easily watch seeds develop into flowers or our children grow up, human life spans are not long enough to allow us to directly observe the process of phylogeny. Whatever we know about it has been gleaned from consideration of patterns of similarity and difference among taxa. Which brings us to pedantic grammatical point 2: "reconstruction" implies putting some *thing* back together again according to a plan or self-evident correspondence of pieces, as for example, mending a broken tea cup or replacing the copper in the Statue of Liberty. The pattern of relationships among taxa is a philosophical abstraction—a conceptual map localizing inferred character-state transformations that systematists believe represents the path that the evolutionary history of life might have taken—not a practical engineering problem, as some of the more algorithmically minded might like to believe. If "phylogeny" (or the execrable "phylogenies," which implies multiplicity) could be uncontroversially "reconstructed," there would be no need for this book or any of the theoretical discussion in the other books and journals we have cited.

The Basis of Systematic Knowledge

In elaborating his arguments establishing a general reference system for biology on the basis of phylogeny, Hennig concluded that in a system of descent with modification, once modifications are fixed in lineages, we can expect to observe a hierarchic distribution of attributes (Hennig, 1966; Davis and Nixon, 1992). Regardless of whether we choose to presuppose "descent with modification" or not, the natural hierarchy of attributes of organisms is an operational assumption of the method for discovering relationships (Brady, 1983; Brower, 2000b). It is the fixity of attributes at the minimum level, what we will call species, that admits the units as valid for analysis in such a system (Davis and Nixon, 1992; but see Brower, 1999).

Hennig's view of the goals of systematics was heavily grounded in biology. A more philosophically oriented statement of purpose was offered by Hull (1965, in Ereshefsky, 1992:202) who declared that "From the beginning, taxonomists have

sought two things—a definition of 'species' which would result in real species and a unifying principle which would result in a natural classification." Hull's statement points to two lines of argument, which overlap at times: (1) whether systematics informs our knowledge of evolution and particularly evolutionary history or (2) whether knowledge of evolution is a prerequisite to understanding systematic relationships.

Hull (1965) argued that taxonomy has a history tainted with "essentialism" and that only when the undesirable influences of that worldview are removed will the scientific status of the field be established. In his discussion of "the species problem," Hull (1965) asserted that taxa are *individuals* and not *classes,* and that taxon names (including species) cannot be defined as classes by sets of properties because to do so would require that the properties be distributed both universally and exclusively among the members of a taxon. If this were not the case, then essentialistic definitions would not be universally applicable.

This view has been adopted by de Queiroz and Gauthier (1990), who noted that numerous taxonomic papers contain a section entitled "definition," which to those authors indicates that the names of taxa continue to be treated as if they were defined by lists of organismal traits and that such "definitions" must then be directly associated with the definition of an essence, in the Aristotelian sense. As such, definition stipulates some necessary and sufficient conditions, and the presumably invariant nature of the properties composing the definition. What seems apparent is that "define" as used in most papers was never intended in any such sense. De Queiroz and Gauthier proposed "phylogenetic taxonomy" as a solution (see further discussion in Chapter 7), in which taxa are "defined" on the basis of lineage relationships rather than character attributes. We simply note here that this alternative use of the term "definition" itself seems to confound de Queiroz and Gauthier's claim that the word denotes essentialism (unless their "phylogenetic definitions" are themselves essentialistic).

The purportedly pernicious influence of essentialism on systematics is elaborated in the works of Mayr (1982) under the heading of "typological thinking." Mayr's worldview emphasizes "population thinking" and the importance of variation in biological systems in general, and of "species" in particular. Mayr has labeled most approaches that are not heavily based on the analysis of variation at the species level and below as typological or essentialist. These labels would evidently apply to most pre-Darwinians, as well as a large proportion of more modern workers. Hull, Mayr, de Queiroz and Gauthier, and Ghiselin (1984) would have us believe that essentialism, in the sense that they understand it, is actually being practiced by these benighted taxonomists, and that it must be eradicated to set things right in systematics as a science. Several systematists and historians of science have challenged the idea that pre-Darwinian systematists were essentialists, or that systematics as practiced by the rank and file suffers from this malady (Wheeler, 1995; Brower, 2000a; Winsor, 2003, 2006; Amundson, 2005).

As noted by Nelson and Platnick (1981:328), the anti-essentialist argument assumes that when the attributes of a lineage change over time, the modified versions

of those attributes will lose their genealogical connections and be unrecognizable. As an example, Nelson and Platnick observed that under this presumptive view of taxonomy, we could not use characters such as fins as part of the definition of the group Vertebrata because some members of that group, the tetrapods, possess fins in the modified form, as limbs. Nonetheless, as we will see, the concept of character transformation plays a central role in current systematic thought of even the anti-essentialists, and all systematists make effective use of that concept in forming hierarchic classifications.

Hull's second imputed aspiration of taxonomists, the "unifying principle which would result in a natural classification," also bears scrutiny in our efforts to understand the basis of systematic knowledge. The "unifying principle" to which Hull alluded is widely thought to be the theory of organic evolution (e.g., Kluge, 2001). Descent with modification is certainly capable of producing the hierarchic patterns of relationships that taxonomists have observed—"from the beginning"—in the jargon of Hull. However, descent with modification, in its status as a unifying principle, does not provide—by itself—a method for discovering that hierarchy, nor does it necessarily imply that the pattern to be discovered should be a hierarchy (Brower, 2002). Hull, the philosopher, having written his tract in 1965, might be forgiven for lack of foresight because the details of a method that is capable of effectively and consistently recovering information on the hierarchy of life was just at the point of becoming widely appreciated. What seems less clear is why subsequent authors—and particularly biologists—have adopted Hull's anti-essentialist arguments lock, stock, and barrel long after the distinction between a theory capable of explaining hierarchy (i.e., organic evolution) and a method capable of discovering the hierarchy of life (cladistics) had been clarified.

Hull's argument concerning natural classifications has been used against those practitioners of cladistic methods—including G. Nelson, N. I. Platnick, and many others—who have argued forcefully that cladistics is a system of pattern recognition and that a priori assumptions about evolution are unnecessary for the success of the method (Platnick, 1985; Brower, 2000b). Beatty (1982) criticized what he called "pattern cladistics" because the approach did not explicitly justify the search for a hierarchic pattern of relationships on what are thought to be the widely accepted tenets of biological evolution. Beatty's criticisms dismiss the idea that the theory of descent with modification gains credence through a largely independent source of evidence provided from systematists' discovery of hierarchic patterns of relationships among taxa. The pattern cladistic approach has more recently been vilified by Donoghue (2001), Kluge (2001), and others.

In responding to the arguments of Beatty, Hull, and others, Platnick (1982) wondered what causal theory was necessary to recognize the group known as spiders comprising 40,000 species of animals, all of which are united by their possession of abdominal spinnerets and male pedipalps modified for sperm transfer. The same might be said for the 1 million species of winged insects, 9,000 species of winged and feathered birds, 250,000 species of flowering plants, and many other groups, all of which were recognized long before the formulation of any coherent theory

of organic evolution. Our ability to recognize such groups in nature is based on the structural attributes that each possesses and the congruence of distributions among those attributes. The relationships among the groups are established on the basis of structural *similarities,* certainly not on structural *identities.* Explaining the existence of hierarchically related systematic groupings is enriched by an overarching material causal-explanatory mechanism, in this case, organic evolution. However, as in other branches of science, our ability to make such discoveries does not depend on such an explanatory theory (Brady, 1985).

An analogy of planetary motion was invoked by Platnick (1982) as a way of bringing this issue into perspective. He asked if causal theories of planetary motion were required to discover the existence and movements of Jupiter. The answer is "certainly not." We might extend Platnick's line of argument by observing that the ancient Greeks, Semites, and Chinese had detailed knowledge of planetary existence and motion, even in the absence of telescopes, and were capable of predicting the positions of celestial bodies with considerable accuracy, in part evidenced today by use of calendars (and horoscopes) derived from these cultures. This detailed knowledge of the heavens was developed even though the earth was erroneously thought to be the center of the universe. Brower (2002) has made the analogous observation that Mendeleev developed the periodic table of elements in the absence of knowledge of the atomic number, the quantity of protons in the atomic nucleus.

Platnick (1982) reckoned that authors such as Beatty, who argue for the primacy of evolutionary theorizing over systematics, have the cart before the horse, both historically and logically. In different words, Patterson (1987:4) noted that: "In the decades after the [appearance of] *The Origin of Species,* comparative morphology became phylogenetic research; common ancestors replaced archetypes, and homology became evidence of common ancestry rather than of common plan [essence]. But these were changes in doctrine rather than of practice."

Perhaps the most elegantly developed argument for the "independence" of systematics is that of Brady (1985:114), who argued that

> the hierarchy of taxa was considered by Darwin [in *The Origin of Species*] to be one of the established facts of natural history . . . The hierarchy and other patterns of natural history were not, therefore, based upon evolutionary theory [in the mind of] the founder of that theory. They occupied a privileged position of an [*sic*] independent evidence, to which one could point for a test of the theory [of evolution].

Brady further observed that systematics is complete in itself, generating its own standards and tests, and that the expounding of evolutionary theory comes after the discovery of the patterns. It seemed clear to him (p. 125) that most cladists discover patterns of relationship by the same method, and he therefore found it odd that those singled out for attack as "pattern cladists" were the ones who insisted that what we know about the world are the patterns derived from observation, rather than the explanations for those patterns. In Brady's view it is the independence

of those patterns that allows systematics to retain its empirical status. Failure to distinguish the empirical problem (the pattern of relationships among taxa) from the explanatory hypothesis (the theory of organic evolution) leaves us with no independent evidence to test that hypothesis. As stated by Brady (1985:117), "by making our explanation into the definition of the condition to be explained, we express not scientific hypothesis but belief. We are so convinced that our explanation is true that we no longer see any need to distinguish it from the situation we are trying to explain."

For the moment, let us summarize by saying that *systematics* is the branch of biology capable of providing a map to navigate the genealogical history of life on earth. The methods advocated might or might not reveal the truth, but they do allow us to interpret the history of relationships among organisms in a way that conforms as closely as possible to the data at hand. *Cladistics* offers a logically coherent and empirically transparent framework integrating observation, analysis, and synthesis of systematic information.

The most general conclusion to be derived from this discussion is that patterns of phylogenetic relationships are neither directly observable nor directly knowable. Rather, acquisition of such knowledge comes from the collection of relevant data and the analysis of those data by appropriate methods. The methods of data acquisition and analysis are described in the chapters of Section 2.

Suggested Readings

Brady, R. H. 1985. On the independence of systematics. *Cladistics* 1:113–126. [A classic explication of the pattern cladistic perspective—a must-read for any serious systematist]

Gaffney, E. S. 1979. An introduction to the logic of phylogeny reconstruction. pp. 79–111. *In:* Cracraft, J., and N. Eldredge (eds.), *Phylogenetic Analysis and Paleontology.* Columbia University Press, New York. [A clear, concise discussion of the hypothetico-deductive approach to systematics]

Magee, B. 1973. Karl Popper. pp. 10–49. *In:* Kermode, F. (ed.), *Modern Masters.* Viking Press, New York. [An easily understood synthesis of the philosophy of science as propounded by Karl Popper]

Popper, K. 1968. *The Logic of Scientific Discovery.* Second English ed. Harper and Row, New York. 480 pp. [Popper's classic paper on the nature of the scientific thought process]

Rieppel, O. C. 1988. *Fundamentals of Comparative Biology.* Birkhäuser, Basel. 202 pp. [An insightful perspective on systematics and its underlying bases]

Siddall, M. E., and A. G. Kluge. 1997. Probabilism and phylogenetic inference. *Cladistics* 13:313–336. [An interpretation of the views of Popper]

Wiley, E. O. 1975. Karl Popper, systematics, and classification: A reply to Walter Bock and other evolutionary systematists. *Systemic Zoology* 24:233–243. [An early discussion of the relationship between the views of Karl Popper and systematic methods]

SECTION II

CLADISTIC METHODS

3

Characters and Character States

Having laid the foundation for a general understanding of systematics and the philosophy of science, we will now begin the detailed examination of methods for establishing hierarchic—phylogenetic—relationships among taxa. The selection of taxa and characters lays the groundwork for all subsequent steps in phylogenetic analysis. The process of observing, coding, and rechecking character information has been referred to as "character analysis." Although central to phylogenetic analysis, there are divergent opinions about what the process represents and how it should proceed. In this chapter, we will explore the theory and methods that allow systematists to recognize characters and the taxa they delimit.

The Role of Homology in Character Recognition

The concepts of synapomorphy and monophyly were central to the method of phylogenetic analysis developed by Hennig and were unequivocally characterized by him. The Hennigian approach has been widely adopted, and the typical introductory biology textbook discussion of systematics states something like, "The cladistic approach to inferring trees is based on the realization that relationships among species can be reconstructed by identifying shared derived characters, or synapomorphies" (Freeman, 2008:544), or "[I]n this approach, termed cladistics, only shared derived characters are considered informative in determining evolutionary relationships" (Raven et al., 2008:455). However, statements of synapomorphy and monophyly represent inferences about characters and taxa, respectively, that cannot be observed directly. It is only through the process of phylogenetic analysis that such knowledge is inferred.

Biologists have produced substantial evidence over the last two centuries for the mechanisms of genetic inheritance and of ontogenetic transformation, cementing our understanding of these processes to the point where we are comfortable referring to Mendel's and Von Baer's Laws. Yet, there is little or no direct evidence for many of the grand-scale macroevolutionary transformations that we infer from phylogenetic patterns: the development of the arthropod body plan, irrespective

of its similarity to that of annelids and onychophorans; the development of insect wings; the development of turtles from more generalized tetrapods; the origin of flowers in the angiosperms. It had long been hoped that paleontology would provide the evidence in the form of intermediate fossils, the missing links. Although evidence exists for the development of tetrapods from fishlike ancestors, of whales from terrestrial mammalian ancestors, and of birds from dinosaurs, for most groups of organisms there are no intermediate fossils and consequently no direct evidence of transformation. Even the fossil "missing links" that provide evidence of intermediate forms between seemingly different taxa occupying distinct stations in the history of life do not provide this hypothesized continuity—they do not "connect the dots" but merely add more dots between those representing extant taxa. What we have, by way of explanation of the apparent discontinuity in the fossil record, is the concept of "punctuated equilibrium" (Eldredge and Gould, 1972). Yet, this does not *explain* transformation, but only suggests that it has apparently occurred relatively rapidly, at intervals, between long periods of comparative morphological stasis.

Even though we have not had the opportunity to witness major structural transformations taking place in biological lineages, natural historians have observed structural correspondences among organisms since the time of the ancient Greeks. These similarities of form were termed "homologous" by the British anatomist Richard Owen (e.g., Patterson, 1982). Owen (1843) defined *homology* as pertaining to "the same organ . . . under every variety of form and function." The criteria used by Owen were the "principle of connections" and the "principle of composition," both of which appeared earlier in the work of Geoffroy St. Hilaire (1818), according to Brady (1985), Appel (1987), and Rieppel (1988). Theories of homology in the sense of Geoffroy and Owen are theories of "anatomical philosophy" that exist independent of the theory of evolution. The "common plan" of homologies found in nature constitutes the empirical pattern of transformation that allows us to postulate connections between one group of organisms and another. It is only through our theories of homology that phylogenetic analysis can proceed. The minimal assumption of the homology concept in cladistic analysis seems to be that features of organisms can be—or have been—transformed over time.

The modern formulation of the criteria for recognizing homologous structures, frequently attributed to Remane (1952), can be stated as follows:

1. Similarity of special structure
2. Position (similarity of topographical relationships)
3. Connection by intermediate forms (transformation)

Mayr (1982) complained that it "was unfortunate, and quite inappropriate, that Remane raised the criteria that served as *evidence* for homology, to the *definition* for homology." According to Mayr (1982:232), "After 1859 there has been only one definition of homologous that makes biological sense: A feature is homologous in two or more taxa if it can be traced back to the same feature in the

presumptive common ancestor of these taxa." Brady (1985:116–117) criticized Mayr's reasoning by noting that it confused the phenomenon to be explained (similarity of structure) with the explanation itself (theory of organic evolution). In Brady's view, Remane was thinking quite clearly when he formulated his criteria for the recognition of homology.

Considering Hennig's viewpoint with regard to homology may help clarify the position of Brady and the one taken in this book, while simultaneously emphasizing the fallacy of the argument presented by Mayr. Hennig (1966:93–94) observed that, "Apparently it is often forgotten that the impossibility of determining directly the essential criterion of homologous characters—their phylogenetic derivation from one and the same previous condition—is meaningless for defining the concept of homology." To make his point, Hennig quoted Boyden (1947), who observed that "Today the pendulum has swung so far from the original implication in homology that some recommend that we define homology as any similarity due to common ancestry, as though we could know the ancestry independently of the analysis of similarities!" The pendulum has not swung back: The introductory biology books quoted above state that homology "occurs when traits are similar due to shared ancestry" (Freeman 2008:545), and homologous structures are "those that are derived from the same body part in a common ancestor" (Raven et al., 2008:461).

To recap, if hypotheses of ancestry, monophyly, and even synapomorphy are inferences based on phylogenetic analyses, then they should not be presuppositions of them. If we want to infer cladograms that provide us with evolutionary insights and test evolutionary hypotheses, we need to establish our methods and principles in terms that do not rely on evolutionary premises. Thus, we discuss the discovery and delimitation of characters in this chapter and will return to discuss homology in greater detail in Chapter 4, at which point we will address Remane's criteria of structural similarity, topographical similarity, and transformation. First, however, let us tackle a long-standing and fundamental philosophical problem.

What Is Similarity?

Similarity is the quality of being the same. In systematics, similarity is a relative relation that exists among at least three things. Two things are more similar to one another than either of them is to a third thing, and the nested degrees of similarity across a range of attributes provide the evidence for hypothesizing phylogenetic relationships. Yet things can be similar in one aspect, but not similar in other aspects. A circle and a square are both planar geometrical forms. A circle and an orange are both round. So, is a circle more similar to a square, or an orange? This problem suggests that similarity is an interpretation framed by the observer's interest and goals for comparing the objects. It also suggests, in a fairly basic way, both the logic and the epistemological challenge of the systematist's method: How do we decide whether roundness or planarity is the more important

criterion of grouping for these objects? Philosophers as well as some philosophically inclined systematists (e.g., Kluge, 2003) have argued that, because of the apparent arbitrariness of resolving such intractable questions, similarity is a vacuous concept. Perhaps in the grand metaphysical sense that is correct, in the same way that other abstract concepts like truth and reality are vacuous. Yet the capacity to discriminate like from unlike is a basic component of human and animal cognition: a toad will not accept as prey a palatable, bumblebee-mimicking robber fly after it has been stung by the bumblebee (Brower et al., 1960). To us, the toad's intuition is more convincing than the philosopher's fulmination. The ability to detect similarity is at the root of sentience and learning in many animal species, and we are confident that systematists can usefully employ the criterion of similarity to make comparative observations among distinct entities and thereby draw inferences about more general patterns in the natural world.

When we compare the structures of insect genitalia, or sequences of the cytochrome b gene, we are making the implicit assumption that the objects of our comparison are fundamentally the same. The act of naming a structure or a gene itself implicitly represents a hypothesis that the named thing is the same in every entity that bears it, regardless of its degree of similarity or difference. It is for this reason that, in addition to the detailed codification of nomenclature for organisms, the parts of organisms also have standardized nomenclatures (e.g., Gray, 1918; Tuxen, 1970).

Rather than being tools to "recognize homology," Remane's criteria—similarity of special structure, position, and connection—are actually epistemological criteria for the formation of character theories. In order for a feature shared among taxa to be hypothesized as a character, it must pass the tests of similarity of special structure, position, and connection. For example, the special structure of the head, with its unique sensory organs, oral end of the digestive tract, etc., allows us to recognize "head" across a wide range of animals (even though cephalization may be independently derived in protostomes and deuterostomes). The relative positions and connections of structures have been guides to recognizing their identity at least since the magnificent comparative anatomical diagrams by Belon (1555) of man and bird, with corresponding bones labeled on each skeleton. If features of different organisms cannot be easily recognized as similar by those criteria, then they may be linked via comparative study of taxa exhibiting intermediate conditions. Features that appear quite different, such as the ear ossicles of mammals and the operculum of actinopterygian fishes, can be related as "the same" through comparison of a series of taxa that exhibit intermediate conditions linking structural and positional similarities (Geoffroy, 1818).

A final concept to mention in the context of similarity is the notion of complementarity. One of the most compelling sources of inspiration for the hypothesis that there is order in biological diversity is the presence of complex features we might want to call "adaptations" in certain groups that are not present in any other groups. As Norman Platnick has often pointed out, "All spiders have spinnerets." Likewise, all birds have feathers, all angiosperms have double fertilization, and

all papilionid caterpillars have osmeteria. Each of these features is present in all members of its respective clade and absent in all other organisms. Although there is nothing remotely similar between the presence of a feature and the absence of that feature, "absent" is the logical complement to the presence of a feature that occurs only in a limited subset of living things. So, these opposites are treated as representing alternate states of the same character in the formal structure of a data matrix. As we will see when we discuss character polarity, in Chapter 4, the presence of a complex feature is often considered as compelling evidence that the taxa bearing it form a clade.

Formal Tests of Similarity

Once recognized and characterized in words, a theory of similarity of a feature shared among taxa may be tested in three (often interconnected) ways: (1) conjunction, (2) similarity of structure, and (3) similarity of position (Patterson, 1982). *Conjunction* dictates that multiple instances of the same structure may not exist in the same organism. Under this criterion the apparent multiple occurrence of an organ or structure would suggest the treatment of nonhomologous structures as the same. The conjunction criterion serves primarily to exclude false concepts of homology. The classic examples are imaginary hexapodous tetrapods, such as angels or Pegasus, which possess both "normal" forelimbs (arms or front legs) and wings (which are structurally homologous to forearms in the actual winged tetrapods that possess them). There are, however, situations that might be considered exceptions to the conjunction test. First is *bilateral* or *radial symmetry* in organisms that display such features. Second is *serial homology,* as represented by structures such as segmental repetition of body parts in the Annelida and Arthropoda and the similarity of the arrangement of bones in the vertebrate fore- and hind limbs. Third is *homonomy,* sometimes called mass homology, which is the simultaneous occurrence of many similar parts of a single organism. Prominent examples include the occurrence of multiple leaves on a single plant, scales on fishes, and hairs on mammals.

At the molecular level, gene or genome duplication can result in conjunction of copies of sequences within the same genome, a phenomenon referred to as *paralogy* (Fitch, 1970). These sequences are the same in the way that tetrapod forelimbs and hindlimbs are the same. In order to infer organismal relationships, it is critical to compare the same (*orthologous*) copy of the gene among taxa. Comparison of paralogous structures or genes across taxa will not provide evidence about the relationships among the taxa, but rather the relationships among the copies.

Similarity of structure and position are the classic tests of "homology": When features of similar structure and position are found in two or more different organisms, they are judged to be homologous, or different instantiations of the same thing. Note that there is no reference to common ancestry in this judgment—the hypothesis is based on observed parts. Consider the tetrapod limb, as it exists in frogs, salamanders, mammals, and "reptiles." There would seem to be little disagreement

in the scientific literature, or on the part of the well-informed nonscientific public, that the forelimbs of all of these groups represent the same structures—that they are homologous—as do the hind limbs among all organisms that possess them. A femur (or a humerus), for example, has a ball at its proximal end and a hinge at its distal end. Similarities can be discovered between apparently very different entities by examination of fine structure. For example, the cell walls of yeast and a bracket fungus are both composed of chitin; the notochord of a larval tunicate shows that it is a chordate. The relative position of constituent parts, sometimes referred to as topographical identity, can also reveal underlying sameness of structures that are superficially dissimilar, such as a whale's flipper and a bat's wing. These judgments are based on the observations that the limbs occupy the same positions on the body, have the same bony elements that are connected to one another in the same proximal-to-distal sequence, and in many cases have the same number of digits on each limb. A tetrapod femur is always attached proximally to a pelvis, and distally to a tibia and a fibula. The transitory comparison of intermediate forms (if A = B and B = C, then A = C) often allows for the formulation of theories of structural sameness between less similar-appearing features; for example, fins and wings are connected by shared structural similarities found as intermediate forms in tetrapod limbs. Such a conclusion, in the minds of most observers, would be based on similarity of position and structure, even though the bony elements have been modified, sometimes to the point of loss, as in the digits of birds.

What Is a Character?

As discussed above, a character is not a physical attribute of a particular organism but a conceptual grouping of such attributes that are judged by the systematist to be "the same" or complementary. It is important to note that the validity of character concepts is not tested by phylogenetic analysis. Characters may be composed of variations on a theme, such as "small versus large" or "A, G, C, or T," or they may represent logical complements, such as "present/absent." Characters can comprise any heritable attributes that may be compared among taxa and show group-defining variation, particularly those that show congruence with other such features. Traditionally, morphology at the macroscopic level has formed the basis for most recognized taxonomic characters. More recently, DNA and amino-acid sequences have become "standard" character sources for many groups, augmenting classical morphology. Behavior and products of behavior also enjoy a place as legitimate sources of character data (Michener, 1953; Wenzel, 1992). Characters may exhibit variation that ranges from simple to complex.

Character information does not present itself directly. It is not self-revealing. What, for example, do you think are the characters in the tidy illustrations in Fig. 1.3? Character data represent, rather, a synthesis of comparative observation (Rieppel and Kearney, 2002). Thus, there is the potential for divergence of opinion among investigators concerning how to recognize the "characters" possessed

by a given group of organisms and concerning the possible approaches for representing that information in a form suitable for analysis.

If, as stated by Pimentel and Riggins (1987), a character includes all homologous expressions of a feature found in the ingroup and outgroup, then the various observed conditions of the feature would be called *states.* Brower and Schawaroch (1996) observed that characters and their states become formalized as different things through the construction of data matrices, in which characters are represented by columns of cells, whereas states are represented by the values in the individual cells. Another way to think of this is that if the character is represented by a noun, then the character states are adjectives modifying the noun (big nose/small nose). The assignment of the condition of a feature exhibited by two or more taxa to a particular character state is a formal statement that the condition of the feature is the same, a property referred to by Brower and Schawaroch (1996) as *character-state identity.*

Because any given state may serve as a group-defining feature, the terms *character* and *state* are often used interchangeably, depending on the hierarchic level at which they apply. Platnick (1978:366), for example, believed that "different character states are merely homologies that are synapomorphic at different levels, and there is thus a hierarchy of increasingly restricted characters rather than a division of characters into alternate states." This is a compelling perspective, but it is based on a view of characters and states in light of a cladogram, which can reveal correlations and connections among characters that are not evident prior to phylogenetic analysis. Although the distinction between characters and states may indeed be semantic, treatment of features as alternate states of the same character versus different characters can have important implications, as we shall see below.

Character Analysis

Systematists stand upon the shoulders of their predecessors, with respect to both prior hypotheses of relationships and the characters that underlie those hypotheses. It is not uncommon for cladists to reanalyze published data matrices (e.g., Oosterbroek and Courtney, 1995, reanalyzed the morphological data of Wood and Borkent, 1989, and others), and many "combined analyses" of morphological and molecular data borrow from the published work of others (e.g., Whiting et al., 1997, borrowed morphological data from Kristensen, 1981, Hennig, 1981, and Boudreaux, 1979; Wahlberg et al., 2005, incorporated morphological data from de Jong et al., 1996). Critical reassessment of prior authors' character coding is rarely conducted, and even more rarely are actual specimens examined to corroborate the original observations. In light of these practices, it is of fundamental importance for the working systematist to analyze characters thoroughly and to explain that analysis clearly in the resulting publication; because for many taxa the work likely will be cited and mined for characters long after its author is dead. Furthermore, in many groups of organisms, most notably insects, group

specialists appear at long-separated intervals, and therefore accumulated knowledge is not passed directly from one investigator to another but only through reading of the published literature.

If we had only two taxa under study, the question of their relationship to one another would be trivial—no matter the number and distribution of character similarities or differences between them—because they would be (tautologically) each others' closest relatives. It is only when we examine three or more taxa that alternate hypotheses of grouping among those taxa exist. These hypotheses may be assessed by examining the distribution of states of one or more characters.

Characters that show no variation among the included taxa, or with variable states unique to a single taxon, provide no evidence of relationships among the constituent taxa because they imply no grouping schemes. Character states observed only in a single taxon are called *autapomorphies* and merely indicate that that taxon is different from others. The characters of interest, from a cladistic perspective, are those that are shared by at least two terminal taxa. because they provide a hypothesis of grouping, although we do not know at this stage which state is derived, and therefore represents synapomorphy.

A naïve person might imagine that once the characters are observed, construction of the data matrix should follow directly and that the rigor of systematics lies in the sophistication of the model employed in the phylogenetic analysis, rather than in the care with which the characters and states have been interpreted. A 2004 book by Felsenstein adopted this perspective, viewing phylogenetic inference as the sine qua non of systematic biology, an attribute punctuated by the fact that the term "homology" does not even appear in its index! Although it may not have been intended as such by its author, that book has been employed as the textbook in graduate-level systematics courses at more than a few universities. The trend toward teaching systematics (often in the guise of "statistical phylogenetics") solely through the use of tree-building algorithms and away from addressing the complexity of characters and taxa strikes us as a fundamentally wrongheaded approach to training the systematists of the future. Understanding the nature and relationships of characters are the keys to understanding phylogenetic patterns (Rieppel, 2006a, 2007c). This is why multiple chapters of this book are devoted to the discussion of characters. We believe that a reciprocal relationship exists between the character data and cladograms (or trees produced by alternative methodologies), and that both characters and cladograms should be viewed as theories subject to test.

It is through the process of *character coding* that specific observations of the features of organisms are converted into comparable character-state data available for use in phylogenetic inference. This is a critical stage of taxonomic/phylogenetic analysis, because tree-building algorithms employ differences in character states to numerically assess the relative propinquity of the taxa. However, because the features themselves do not tell us how they should be recognized and coded, we must establish some criteria by which to convert qualitative observations into discrete characters and states. We already examined the hypothetical nature of character observation and coding in Chapter 2.

Coding Criteria

Under the assumption that each expression of a feature is unique to a single group, one might well conceive a system in which all characters were coded as present in one group and absent from all other groups. Such characters are often referred to as *binary* or *two-state characters.* So coded, characters would represent observations, or conjectures, the only test of which is congruence with other characters. Thus conceived, character theories are presumed by some authors to be minimally theory laden. A character theory could then be rejected when the character appears in more than one group as implied by the most parsimonious cladogram or, as stated by Lipscomb (1992:55), when there is "non-congruence due to non-homology in two or more different taxa." This is *scattering* (Fig. 3.1) in the parlance of Mickevich and Lipscomb (1991), the most basic form of *homoplasy.* A good example is the occurrence of endothermy in birds and mammals.

Because many features manifest only two conditions in the groups being studied, the question of how they should be coded is not at issue. The character states are complementary: either "this" or "that." We might use as examples "wings absent or wings present" in animals, or "seeds absent or seeds present" in plants. However, when there are three or more conditions for a feature, such as "corolla with 3, 4, 5, 6, or numerous petals," "antennae filiform, moniliform, serrate, pectinate, clavate, capitate, or lamellate," or "nucleotide site 630 A, G, C, or T," then the question of how the characters should be coded—the relationship among the various alternative states—becomes more complex. Any complex character can be broken down into a series of discrete binary characters (so-called *presence–absence coding*

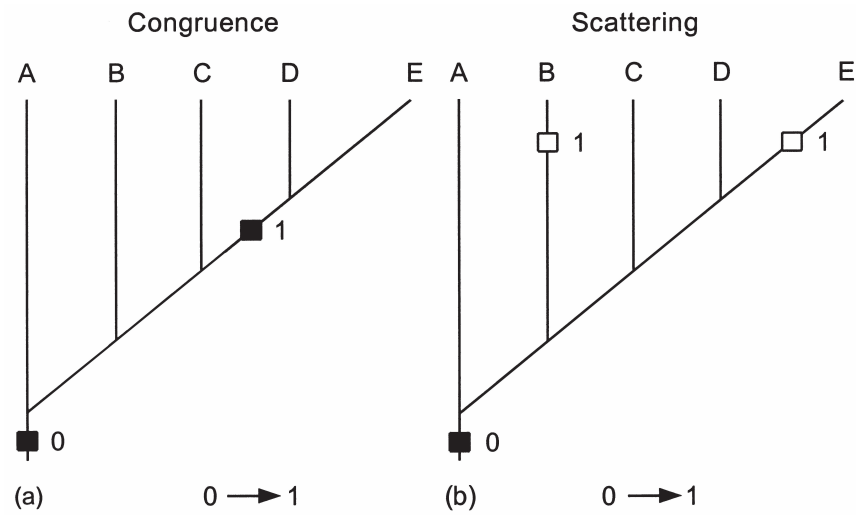

Fig. 3.1. A two-state character, parsimoniously distributed on a cladogram of five taxa (a), and showing scattering, with the derived condition occurring independently in more than one terminal taxon (b).

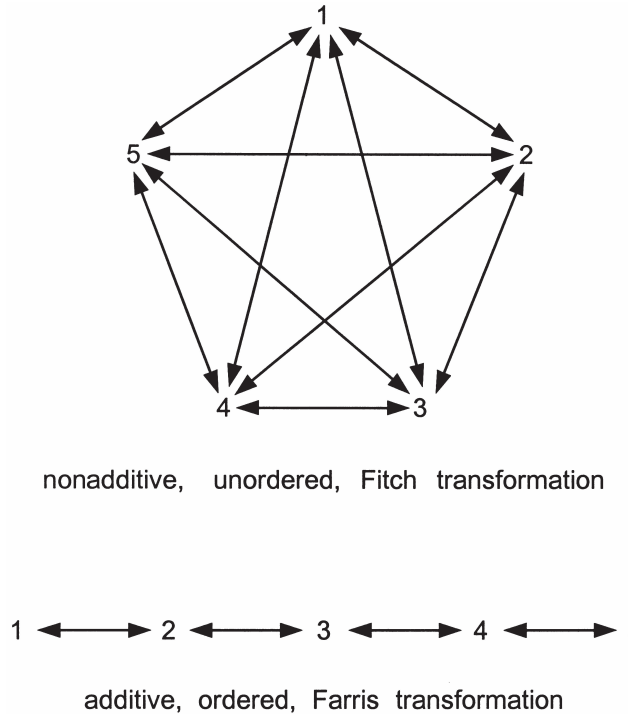

Fig. 3.2. Diagrammatic representation of unordered (nonadditive; Fitch) transformation (above), allowing any state-to-state change, as frequently used in the analysis of DNA sequence data. Ordered (additive; Farris) state-to-state character transformation (below), as ordinarily used in morphocline analysis, transformation series analysis, and homology analysis. Under the nonadditive approach, no state-to-state theories of transformation are implied, and any state-to-state transformation is possible without the imposition of additional steps. Under the additive approach, transformations from one state to another are postulated on the basis of observed similarities in the states, and additional transformational steps are required if the state-to-state order does not conform to the cladogram.

[Meier, 1994; Pleijel, 1995]), or it can be viewed as a more elaborate whole with multiple parts.

The implementation of multistate codings requires an approach for postulating transformation from one state to another. If the characters themselves are recognized on the basis of similarity of position and structure, then it is the "connection by intermediates" that allows hypothesizing state-to-state transformation. Sometimes this is intuitively obvious, in cases such as "small–medium–large," in which "medium" seems uncontroversially to represent the conjoining state between the two extremes. However, in other instances, such as "red, white, blue," there is no evident transformation series. In such cases, the simplest approach to coding a multistate character treats multistate characters such that any state of a homologous feature may transform to any other state with equal "cost" (Fig. 3.2; see also Optimization, Chapter 5). This hypothesis of relationships among character states

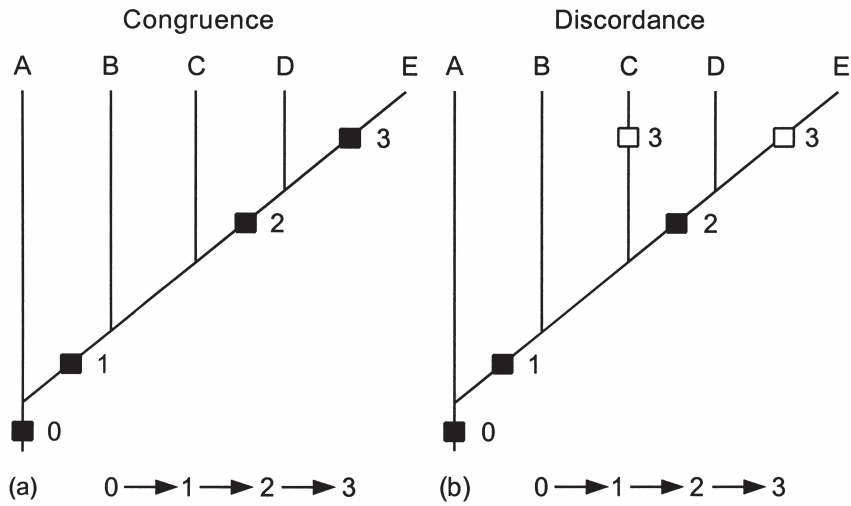

Fig. 3.3. A multistate character parsimoniously distributed on the cladogram (a), and showing hierarchical discordance (b), the character not fitting the cladogram perfectly.

is called *Fitch transformation* (Fitch, 1971), and such characters are described as *nonadditive* or *unordered.* This coding approach is most commonly used in parsimony analyses of DNA sequence data, data that would otherwise require a specified model of sequence evolution, but it is also used for many morphological characters where there is no apparent transformation series implied by relative similarity among states. Use of nonadditive coding achieves maximal congruence between the data and the cladogram, since only homoplasy due to scattering is taken into account. However, in the case of morphological characters, this agreement is achieved by ignoring observed information on transformation (see example in Fig. 5.2). All other approaches imply state-to-state transformational order.

Mickevich (1982) argued strenuously against treating all character data in a two-state (presence–absence) format and also against unordered multistate characters, urging instead the use of multistate codings when three or more conditions of a homologous feature exist. Under this view, multistate codings are said to represent more meaningful and bolder hypotheses of character transformation. The degree to which multistate-character theories disagree with the cladogram they define is termed *hierarchical discordance* (Fig. 3.3; Mickevich and Lipscomb, 1991), which is the "non-congruence due to non-homologous similarity used to hypothesize order of states in multistate characters" (Lipscomb, 1992:56). At least three techniques have been proposed for coding transformational information.

Morphocline analysis (Maslin, 1952), as here defined, orders states on the basis of similarity alone, without regard for congruence, and may therefore produce transformation series in which homoplastic similarity is confused with homology

(Lipscomb, 1992). Under this precladistic approach, rules other than congruence would be invoked to adjudicate character conflicts.

Transformation series analysis (TSA) (Mickevich, 1982) orders the states of a character on the basis of similarity. The hypothesized transformation is then tested by whether or not the character is concordant (congruent) with the cladogram it defines (i.e., whether the character-state transformations are distributed parsimoniously on the cladogram). If not, the character is recoded, and the data are reanalyzed. This process is repeated iteratively, until global agreement between all multistate characters and the cladogram is maximized. This coding method might be envisioned as an extension of Hennig's idea of "checking, correcting, and rechecking." TSA was criticized by Lipscomb (1992:61) for discarding information on similarity among states in favor of codings that define a more resolved cladogram. Because no algorithm exists for checking global concordance among all multistate characters in a given data matrix, it may be impossible to tell whether an optimal result has been obtained under this method.

Homology analysis uses both similarity and congruence to evaluate character codings. Lipscomb (1992) argued that the flaws of the above-mentioned approaches to multistate coding can be avoided by employing this method. When using homology analysis, information on observed similarity is not discarded simply because the character has an imperfect fit to the cladogram. Rather, Lipscomb recommended checking all similarity-based transformation theories for congruence with other data, accepting those showing maximal congruence. However, she rejected recoding similarity-based transformations simply to achieve congruence.

Example and Discussion

If the forelimbs of mammals were conjectured to be homologous with the wings of birds (cf. Belon, 1555), few would doubt the hypothesis, and it might even seem evident without recourse to other character information. On the other hand, the hypothesis of limb loss in snakes might be thought stronger via recourse to congruence with other characters because most snakes possess no structural remnants of the forelimbs whatsoever and only a few snakes show hind limb remnants. All of these conditions might also be judged homologous with the pectoral fins of fishes. In *presence–absence* format, the characters could be coded as follows, where "0" represents absent and "1" represents present, the unique condition:

1. (0) anterior appendages absent, (1) anterior appendages present as fins
2. (0) anterior appendages not in the form of limbs, (1) anterior appendages in the form of limbs
3. (0) anterior appendages not present as wings, (1) anterior appendages present as wings
4. (0) anterior appendages present, (1) anterior appendages absent (lost)

The same information could be coded in an ordered, multistate format where the numbering sequence indicates the adjacencies of the states:

(0) anterior appendages absent, (1) anterior appendages present as fins, (2) anterior appendages present as limbs, (3) anterior appendages present as wings, (4) anterior appendages absent (lost)

Graphically, this multistate coding can be presented as follows:

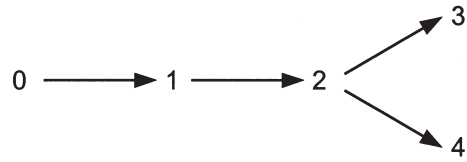

Wilkinson (1995b), in an examination of character coding approaches, coined the terms "reductionist coding" and "composite coding." In the above example, the presence–absence coding could be termed *reductionist coding,* treating as many conditions as possible as unrelated. This type of coding was referred to by Pimentel and Riggins (1987) as the "stepwise decisions approach," which they said offered the utility of a pencil and paper solution, but which could introduce errors into the phylogenetic analysis. The presence–absence approach was defended by Pleijel (1995), who believed it to be simpler and more straightforward than multistate coding because it removes the necessity for making decisions about state order, allowing that information to emerge as a result of cladistic analysis. In spite of the benefits envisioned by Pleijel, hypotheses of transformational similarity are not retained when a feature with three or more states is coded in presence–absence format.

The multistate coding shown above represents the *composite coding* of Wilkinson. This approach may combine conditions that some observers would say are not homologous, and which therefore should be coded via a reductionist approach. For example, leg loss in some amphibians, some lizards, and snakes might be grouped—incorrectly—as a single character "anterior appendages absent." Such a hypothesis would, of course, be interpreted as homoplasy in light of a phylogenetic analysis including numerous other characters, and if the observer had evidence that the absence of legs was somehow not homologous among these taxa, it could be coded specifically as such. To its advantage, multistate coding treats all "homologous" expressions of a feature as parts of a single character, thereby preserving information on similarity and transformation.

Because the test of a hypothesized character-state identity is its congruence with patterns implied by other characters, we might then wish to code all character data to maximize congruence. Whether this is best achieved via two-state

or multistate codings is not always clear. In summary, presence–absence coding would seem to have the following limitations:

1. Some states will not be coded as the result of observations. This phenomenon will probably occur most frequently for certain "absence" states in characters that would have otherwise been coded as multistate.
2. Absence connotes a non–group-forming condition of a feature. Therefore, presence–absence coding may imply knowledge of polarity a priori. For many attributes, such knowledge may appear virtually self-evident; for example, the relative recency of origin of tetrapod limbs versus fins, or the presence versus absence (notwithstanding secondary loss) of wings in insects. Yet, for many homologous features, polarity is far from obvious, especially in those cases where detailed cladistic analysis ultimately suggests character reversal.
3. Presence–absence codings may discard evidence for transformation in complex features.
4. During optimization of hypothetical ancestral states (see Chapter 9), internal nodes may be inferred to have possessed the "absent" condition for all characters (Meier, 1994).
5. For some types of data, such as DNA sequences, presence–absence coding is onerous and intuitively nonsensical. For instance, so coded, a single nucleotide site would constitute five "characters": nucleotide present/absent; adenine present/absent; guanine present/absent; cytosine present/absent; thymine present/absent.

Multistate codings, on the other hand, simply hypothesize possible transformations among multiple states (i.e., ordering) on the basis of similarity. This approach to coding does not necessarily imply polarity, however. The optimal rooting, and therefore polarity of a character, will be determined by addition of the outgroup (Chapter 4).

The assumptions of the coding methods described above can be summarized as follows:

1. Presence–absence coding does not assume that alternative states are manifestations of the same character concept.
2. Nonadditive coding assumes a common character concept, but does not assume a particular transformation order (see Fig. 3.2);
3. The remaining methods (morphocline analysis, transformation series analysis, homology analysis), all of which represent additive codings, make both assumptions (see Fig. 3.2).

On the basis of the above discussion, it can be argued that features with three or more conditions should be coded as multistate. The value of such an approach will be that (1) each state coding will be based on observation, and (2) information on observed similarity that implies a particular transformational order can be

preserved in the coding. In practice, systematists often employ different coding strategies for different characters within a single matrix.

Character-State Transformation Weighting

In addition to the imposition of fixed transformation series on character states, it is also possible to differentially weight the *costs* of different types of state transformations. There are various approaches to this, and the approach chosen has potential to exert a fundamental impact on the resultant tree topology. Note that character-state transformation weighting is different from differential character weighting: The former is differential weighting of various transformations among the states of a single character; the latter is differential weighting among separate characters. Both of these types of differential weighting will be revisited in Chapter 5 when we discuss their impact on inference of tree topologies.

As discussed above, nonadditive coding allows any character state to transform to any other character state at equal cost, which is the most general hypothesis of character-state transformation. If characters are coded additively, this imposes differential costs on different types of transformation, depending on the relative *adjacency* of the character states on the character-state tree. Thus, in the ordered character in Fig. 3.2, a change from state 1 to state 5 is four steps. Unless otherwise specified, these transformations are symmetrical (change from 1 to 5 costs the same as change from 5 to 1). This need not be the case, however. Camin and Sokal (1965) described a scheme in which character change is irreversible, such that a reversal has a weight of infinity. Dollo characters (Farris, 1977) are weighted such that a derived state can arise only once, but can be subsequently lost multiple times.

Some authors, such as Swofford and Olsen (1990) have labeled different types of character-state transformation as different "kinds of parsimony," what we view as an obfuscating misuse of the term. As discussed in Chapter 2, parsimony is a basic and venerable methodological rule that underlies all empirical science and, more specifically in cladistics, provides the rationale for selecting the tree with the smallest number of implied character-state transformations. Neither the general nor the more specific meanings of parsimony should be confused with state transformation weighting schemes per se, which represent only one of the factors that can affect the length and topology of the shortest tree implied by a given data matrix. Nevertheless, so-called generalized parsimony, a framework often employed in models of molecular evolution, is an unordered transformation matrix with assignable costs for each of the various types of transformations. A common example is the differential (usually down-) weighting of transitions with respect to transversions, known as the Kimura two-parameter "model" (which in its most extreme form is "transversion parsimony," whereby transitions [A↔G, C↔T] are weighted zero). The oft-employed generalized time-reversible (GTR) "model" in maximum likelihood analyses is a symmetrical matrix of specified differential

Character	0	5	10	15	20	25	30	35	40	45	50	55	60	65
Hypochilus	00001	11000	00000	00000	00000	00000	00000	00000	00000	00100	00001	-0000	00000	00
Ectatosticta	00001	11000	00000	00000	00000	00000	00000	00010	00000	00100	00000	-0000	00000	00
Gradungula	00010	00111	11020	00100	00000	00000	00000	00001	00001	00000	0000?	-?000	00000	00
Pianoa	00010	00111	11020	00100	00000	00000	00000	00001	00001	00000	0000?	-?000	00000	00
Hickmania	00010	00111	10110	00100	00000	00000	00020	00001	00001	00000	0000?	-1000	00000	00
Austrochilus	00010	00111	10110	01100	00000	00000	00020	00000	00001	00000	0000?	-1000	00000	00
Thaida	00010	00111	10110	01100	00000	00000	00020	00000	00001	00000	00001	-1000	00000	00
Filistata	00110	00101	10001	12000	00000	00000	10011	10001	00001	10000	00010	-1000	00010	11
Kukulcania	00110	00101	10001	12000	00000	00000	10011	10001	00001	10000	00010	-1000	00010	11
Scytodes	11110	00111	10001	12000	00000	00000	-0141	10101	0000-	-0000	00000	-0010	01010	00
Sicarius	11110	00111	10001	12000	00000	00000	-0141	11101	1000-	-0000	00000	-0000	00010	00
Drymusa	11110	00111	10001	12000	00000	00000	-0131	10101	0000-	-0000	00000	-0010	01010	00
Loxosceles	11110	00111	10001	12000	00000	00000	-0141	11101	1000-	-0000	0000-	-0100	01010	00
Diguetia	11110	00111	10001	12000	00000	10001	-0121	10101	1000-	-0000	00000	-200-	11010	10
Segestrioides	11110	00111	10001	12000	00000	10001	-0121	10101	1000-	-0000	00000	-2001	1101?	00
Plectreurys	01110	00111	10001	12000	00001	10000	-0121	10111	100--	-0000	00000	-210-	1111?	00
Kibramoa	01110	00111	10001	12000	00001	10000	-0121	10111	100--	-0000	00000	-2100	1111?	00
Pholcus	01110	00111	10001	12000	00000	00000	-0141	10101	110--	-0000	00000	-1001	1111?	00
Caraimatta	11110	00111	10001	12010	00000	00000	-0020	10111	100--	-0000	0000-	-1000	00110	00
Nops	01110	00111	10001	12010	00000	00000	-0041	10101	1000-	-0000	00000	-1000	00010	00
Ochyrocera	11110	00111	10001	12000	00000	00000	-0130	10101	1101-	-0000	00000	-1000	01010	00
Segestria	11010	00111	10201	12010	00000	00000	-0040	10011	0000-	-0000	00000	-1000	0001?	00
Dysdera	11010	00111	10201	12010	00000	00000	-0040	10011	1000-	-0000	00000	-0000	00010	00
Mallecolobus	11010	00111	10201	12010	00000	00000	-0040	11011	0000-	-0000	00000	-?000	00010	00
Dysderina	11010	00111	10201	12010	00000	00000	-0040	11111	1000-	-0000	00000	-1000	00010	00
Appaleptoneta	11010	00111	10001	12000	00010	00000	-1140	10001	1001-	-0000	00000	00000	00000	00
Usofila	11010	00111	10001	12000	00010	00000	-1040	10101	1001-	-0000	00000	00000	01010	00
Archaea	01010	00111	10001	12001	11110	00000	-0030	00010	1010-	-0001	10000	01000	00001	10
Mecysmauchenius	01010	00111	10001	12001	111?0	00000	-0130	00110	1010-	-0001	10000	??000	00001	00
Tricellina	01010	00111	10001	12001	11010	00000	-0140	00110	1010-	-0000	00000	00000	00000	10
Huttonia	01010	00111	10001	12001	10010	01000	-0140	00010	1010-	-0000	00000	11000	00001	10
Otiothops	01010	00111	10001	12001	100?0	01000	-0140	00110	1010-	-0000	00000	??000	00001	10
Waitkera	00010	00-11	10001	12000	00010	00010	00130	00010	00-01	00000	01002	21000	00000	?0
Tetragnatha	01010	00111	10001	12000	00010	00110	-0130	00010	10-0-	-0100	00103	01000	0000?	?0
Crassanapis	01010	00111	10001	12000	00010	00110	-0130	00100	1010-	-0000	00103	01000	00000	10
Oecobius	00010	00111	10001	12000	00010	00000	00100	00010	10000	11000	00010	01000	00001	10
Stegodyphus	00010	00111	10001	12000	00010	00000	00100	00010	00-00	11000	00012	01000	00001	10
Deinopis	00010	00111	10001	12000	00010	00010	00100	00010	00-01	01000	01002	21000	00001	10
Dictyna	00010	00111	10001	12000	00010	00000	00140	00010	10101	01010	0000?	21000	00000	?0
Callobius	00010	00111	10001	12000	00010	00000	00120	00010	10101	11010	00002	11000	00001	10
Araneus	01010	00111	10001	12000	00010	00110	-0130	00010	0010-	-1100	00003	01000	00000	10
Mimetus	01010	00111	10001	12001	10010	00000	-0130	00010	0010-	-1100	00000	01000	00000	10
Pararchaea	01010	00111	10001	12001	111?0	00000	-0130	00100	1010-	-1100	0000?	??000	00000	10

Fig. 3.4. A typical data matrix, with the first taxon (*Hypochilus*) representing the outgroup. Missing information is represented by a dash (from Platnick et al., 1991: Table 2. Courtesy of the American Museum of Natural History).

transformation costs for each of the six nucleotide transformation types, A↔G, A↔C, A↔T, G↔C, G↔T, C↔T. Note that "generalized parsimony" is not a model any more than a grid of empty cells is a data matrix.

Data Matrices and Coding Methods

Character data, when being prepared for processing by computer algorithm, are normally assembled in the form of a matrix (Fig. 3.4). By convention the taxon names are listed as the rows on the left and the characters are listed as the columns across the top. Some data sets could be coded adequately and accurately based only on the discussion up to this point. Other data will contain complexities that require knowledge of additional techniques, however.

Linear versus Branching Characters

Multiple states of a character can be coded in a linear format, up to a total of 10, for most computer programs. Such coding may take on a branching form if the

condition found in the outgroup is placed somewhere in the middle of the sequence of states, rather than at either end, as shown below.

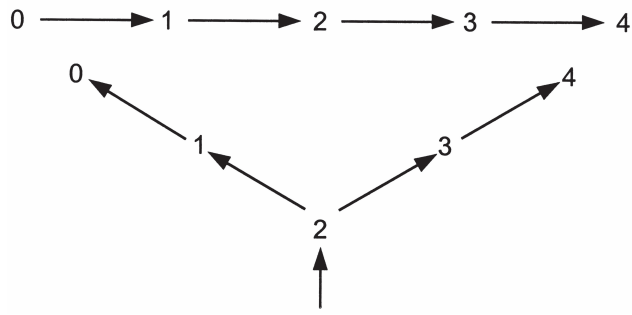

This approach was labeled *internal rooting* by O'Grady and Deets (1987), who observed that although it minimizes the number of variables (columns in the data matrix) required to code a simple-branching multistate character, it has the disadvantage of showing the outgroup condition (primitive condition) as something other than the conventional zero. In the example, 2 becomes the outgroup condition in the internally rooted character, whereas it would be 0 in the linear character.

Not all computer phylogenetics programs currently in use support complex branching in character-state trees. Thus, if you wish to code character data that take on the form of more complex branching character-state trees, you must do so with techniques such as *additive binary coding* or *nonredundant linear coding* (see Farris, 1970; O'Grady and Deets, 1987; Pimentel and Riggins, 1987; O'Grady et al., 1989). These methods will allow for any character-state tree to be described accurately. However, such recoded characters will occupy more than one column in the matrix, complicating comprehension of the relationship of the various states of the character in synapomorphy lists and other diagnostic output from the programs. Both types of coding maintain the state-to-state order assigned at the time of coding. Characters need not be coded in nonadditive formats, even if one wishes to process the data under that approach to optimization, because all computer phylogenetics programs allow, as an option, the processing of additively coded characters on a nonadditive basis. The converse is not true, however, and it is therefore always preferable to code characters in a format that includes hypothesized state-to-state transformations based on observation, if such hypotheses are warranted. This caveat does not apply to DNA sequence data.

Additive binary coding will require variables (characters; columns) equal in number to the number of terminals plus the number of internal nodes for the hypothesized character-state tree if the feature has a distinctive condition for all of the taxa being coded. If the feature does not possess a distinctive condition

(a)

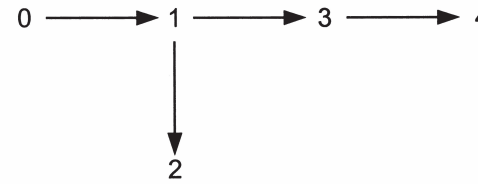

(b) Additive Binary Coding

Taxon \ Variable	0	1	2	3	4
Taxon X	0	0	0	0	0
Taxon A	1	0	0	0	0
Taxon B	1	1	1	0	0
Taxon C	1	1	1	0	0
Taxon D	1	1	0	1	0
Taxon E	1	1	0	1	1
Taxon F	1	1	0	1	1

(c) Nonredundant Linear Coding

Taxon \ Variable	0	1
Taxon X	0	0
Taxon A	1	0
Taxon B	2	1
Taxon C	2	1
Taxon D	3	0
Taxon E	4	0
Taxon F	4	0

(d)

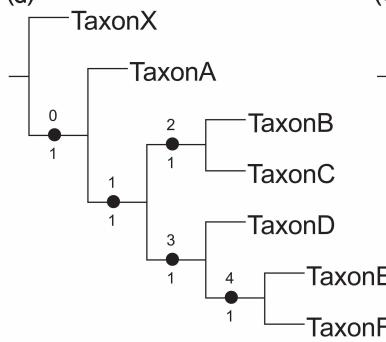

(e)

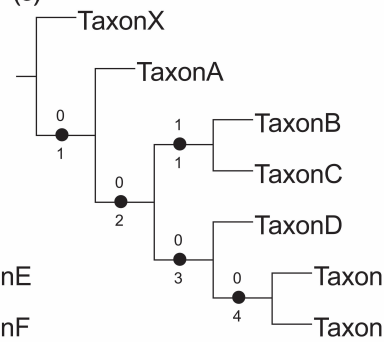

Fig. 3.5. A hypothetical branching character-state tree (a) coded in additive binary format (b), and nonredundant linear format (c). The relationships of the taxa derived from additive binary coding are shown in cladogram (d) and for nonredundant linear coding in cladogram (e). The character numbers for each taxon are shown above the line in the cladogram; the states present in each taxon are shown below the line. The non-redundant linear coding assumes that the characters are treated as additive; variable 0 represents characters 0, 1, 3, 4 in the character-state tree; variable 1 represents character 2. See text for further explanation.

for every taxon being coded, then the number of variables necessary to code the information will be reduced. The matrix values are determined by assigning a "1" (derived) code to each terminal contained in the most inclusive grouping on the tree. The process is then repeated for the second most inclusive grouping on the tree, and so on, until all inclusive groupings have been coded. As with any coding technique, autapomorphies are unique to the terminals that possess them, and therefore a "1" (derived) code will be assigned as a unique value for each terminal.

An example of additive binary coding is shown in Fig. 3.5. Six hypothetical taxa have the character-state transformation tree shown in Fig. 3.5a. The character-state distributions among the taxa are shown in Fig. 3.5d. The matrix shown in Fig. 3.5b contains the 5 binary variables required to recover the branching pattern shown in Fig. 3.5d. The groupings formed by each variable are shown on the cladogram and above each variable in Fig. 3.5b. No autapomorphic states of this character exist in any of the taxa, and therefore none are coded in the matrix (note that although taxon A is the only one exhibiting state 1, and taxon D uniquely possesses state 2, these are considered plesiomorphies and not autapomorphies in this scheme).

Nonredundant linear coding requires fewer variables than additive binary coding because multistate coding is used to code the states for the longest ordinal subset (longest sequence of states) on the character-state tree. Additional binary variables are then used to code the branches that remain. For this reason, the method has also been referred to as "ordinal-additive binary coding" and "mixed coding" by Pimentel and Riggins (1987). Returning to the example character-state tree shown in Fig. 3.5a, we see one possible approach to nonredundant linear coding for this hypothesized transformation in Fig. 3.5c. Variable 0, now in multistate form, codes for the nodes on the cladogram using four conditions. The branch comprising taxa B + C is coded in variable 1. No autapomorphic states of this character exist in any of the taxa, and therefore none are coded in the matrix. In this example, two variables code the same data that required five variables using additive binary coding, their state distributions being shown in Fig. 3.5e.

Autapomorphies

One might assume that a matrix of character data would always include as much information as possible. Consider, however, autapomorphies—characters unique to terminal taxa. We might wonder whether autapomorphies should be included in data matrices used for phylogenetic analyses. On the one hand, it has been argued that they should not because autapomorphies inflate the value of "fit statistics" such as the *consistency index* (discussed in Chapter 6), which provides an elevated but artificial sense of character congruence for a given matrix and therefore makes comparisons of such statistics across matrices less meaningful.

Sidebar 5
Character Independence

The literature contains many statements arguing that character independence is a prerequisite to conducting phylogenetic analysis. As such, independence is simply a methodological requirement of quantitative science. Cladistics identifies groups supported by evidence in the form of characters, a point made by Hennig when he observed that the more characters defining a group, the greater our confidence in the monophyly of the group. If characters lacked independence, confidence in groups defined by multiple characters would clearly not vary from that for groups defined by single characters.

Structures existing on different parts of the body would appear, de facto, to represent independent characters. Yet the potential for correlation among morphological features presents a difficult problem of interpretation to the systematist. One would be disinclined to view multiple measurements of size or of bilaterally symmetrical parts as independent observations, yet characteristics of serially homologous features like teeth in mammals and wing venation in insects represent some of the pillars of our understanding of relationships in those groups. For characters that are structurally associated, there may be no direct evidence for independence; rather, independence could be assumed if the structurally allied characters serve to define groupings of taxa at different levels in the cladogram.

Arguments for independence have been advanced for DNA versus gross morphological data, for DNA data derived from different parts of the genome and known to have different functions, and even for different parts of the same gene that may be evolving under different selective pressures or constraints (e.g., introns vs. exons, different nucleotide positions in a protein coding sequence, or stems vs. loops in the secondary structure of rRNA molecules) (e.g., Bull et al., 1993). However, this perspective has the undesirable corollary that if various different partitions are "independent" as partitions, then the characters (individual nucleotides) within each partition must therefore be nonindependent of one another, implying that they should be discounted (DeSalle and Brower, 1997). This is clearly counterproductive.

In practice, under most circumstances, character independence would seem to be assumed by necessity, in order for characters to have the additivity necessary for them to serve as evidence in the calculus of quantitative systematic analysis. Systematists acknowledge that this assumption underlies our analyses, and that we therefore are obliged to remove characters when we see evidence of nonindependence due to structural, functional, developmental, or adaptive constraint.

On the other hand, if the taxa being analyzed are not species but rather collections of species, the autapomorphies add information by documenting the monophyly of the terminals even though they offer no information on grouping of those terminals with other taxa.

We might conclude that if the goal of a study is to make comparisons of the amount of homoplasy among matrices, then removal of autapomorphic characters would be a desirable approach. If, however, the primary goal of assembling data matrices is part of a continuing effort to document the distinctive attributes of the taxa under study and document the monophyly of supraspecific terminal taxa, then autapomorphies should be included in the matrix. Furthermore, today's autapomorphy may become tomorrow's synapomorphy if additional species belonging to the clade are discovered. Computer phylogenetics programs make it possible to compute trees and fit statistics using only informative characters. Thus, we recommend that all observed variable attributes be included in a data matrix. The uninformative characters can easily be excluded for the purposes of computation without physically modifying the data matrix.

Missing Data

There are two types of absences for which transformational information is truly not available. These have been referred to as *missing* (unavailable) and *inapplicable* data.

Missing data, in the sense used here, are those characters that cannot be coded for a given taxon because the information is not available at the moment. This does not mean that the data might not be available in the future with the acquisition of more specimens, or specimens in a proper state of preservation. *Inapplicable data* are those that can never be coded for a given taxon because the taxon does not possess the structure on which the character is based.

An example may help to illustrate these points. Most insects have wings, and the wings themselves possess many distinctive attributes useful for forming groupings of the taxa in which they occur. However, secondarily-wingless insect taxa cannot be coded for attributes of the wings themselves, such as for example, patterns of venation. Therefore, attributes of wings are inapplicable in secondarily wingless forms. On the other hand, some species of insects exist in both winged and wingless morphs (e.g., ants, aphids). If a matrix were coded using the wingless morph because only that form was available at the time, the relevant states should be coded as though the data were unavailable, in lieu of acquiring winged specimens.

Another example is the absence of nucleotides in DNA sequences. Nucleotides could be absent from a data matrix because the researcher failed to get complete reads of the sequence for one or more taxa. Such data would be characterized as *missing.* Alternatively, many gene regions vary in length from one taxon to another, and when these are aligned to imply homology of nucleotide sites across taxa, shorter sequences will possess implied gaps or deletions where nucleotides

that are present in other taxa are absent. These empty cells in the aligned data matrix may be either equated with missing data or coded as a fifth character state (see Alignment of DNA Sequence Data, below).

In light of the above discussion, we conclude that it is desirable to distinguish between missing and inapplicable data in preparing a data matrix. Such a distinction will facilitate future character analysis and additions of data to matrices. Computer phylogenetics programs do not distinguish between the two types of absences.

There may be many cells coded as missing in a matrix of data sets combined for "simultaneous analysis," as, for example, in the case of morphological and DNA sequence data collected by different investigators for the same higher taxon, but not representing identical terminal taxa. Missing observations sometimes cause lack of resolution or other undesirable perturbations to the analysis, particularly if they are complementary, such that, for example, characters 1–50 are missing for taxon A, and characters 51–100 are missing for taxon B. Such distributions of missing data can result in thousands of spurious equally parsimonious trees and a complete lack of resolution (Wilkinson, 1995a; Wiens, 2003).

What approaches might we take to minimize the numbers of empty cells in the matrix? We might choose to *fuse terminals* or to use *exemplar terminals* (Nixon and Carpenter, 1996). If it is acceptable to combine DNA sequences from one terminal taxon with morphology from another because each partial data set is a fair representation of variation for the combined taxa as a whole, terminal fusion is an option. The nature of such fusions should be explicitly described under discussion of data coding and analysis to facilitate future testing of results and to allow subsequent incorporation of new data that eliminates the requirement for fusing terminals. In using the exemplar approach, we might choose to remove from the analysis some terminals represented by incomplete data, on the assumption that other included terminals with complete data will fairly represent the higher taxon to which all of the terminals in question belong. Strictly speaking, all systematic investigations are de facto exemplar studies since they rely by necessity on non-exhaustive sampling of species or individual organisms that could in principle be sampled (Vrana and Wheeler, 1992). In practice, however, the alternative to fused terminals and exemplar terminals is to code higher taxa using a "ground plan" that itself derived from a rigorous analysis of the data. It is only with the introduction of molecular data that most authors have abandoned the ground-plan approach and moved to coding all cells on the basis of observation.

Common instances in which particular taxa are missing data in empirical data sets include larval stages of holometabolous insects, which are often not collected or not associated with the corresponding adults, missing DNA sequences from rare or extinct taxa represented solely by historical specimens in museum collections, and missing soft parts and DNA sequences from fossil representatives of both invertebrate and vertebrate taxa. These taxa can nevertheless provide critical evidence that changes interpretations of homology for individual characters and alters tree topologies (Kearney, 2002).

Polymorphisms

Some authors have coded as "missing" characters that are polymorphic in terminal taxa, the so-called X-coding of Doyle and Donoghue (1986). Nixon and Davis (1991) criticized that approach because it does not take into account variation in the terminals during phylogenetic analysis; consequently, the resulting cladograms are often not computed correctly. Therefore, polymorphic terminal taxa should be explicitly coded with all possible combinations of character states that are known to occur within such lineages. This approach will allow for the discovery of parsimonious solutions in which polymorphic lineages may be found to be polyphyletic. Some phylogenetic software allows the alternate interpretation of polymorphic characters as "or" (uncertainty, assigned to the inferred state of the sister taxon) or "and" (each polymorphic terminal has both states). The selection of one or the other option can impact implied tree lengths and needs to be considered when various metrics are being calculated. In DNA sequence data, which often exhibit intraindividual polymorphism due to the diploid nature of the nuclear genome, there is a standardized ambiguity code for all combinations of nucleotides that may occur at a given site.

Intrinsic versus Extrinsic Data

A distinction between intrinsic and extrinsic data has been made by a number of authors. *Intrinsic* characters are those obviously subject to the mechanisms of inheritance, such as gross morphology and DNA sequences. *Extrinsic* characters are those not apparently subject to the rules of heredity, as for example biogeographic information and host associations. The former type of character data has traditionally been used in the construction of cladograms. The latter type has usually been examined to determine the degree to which it is congruent with intrinsic character data (see further discussion in Chapters 8 and 9).

Kluge and Wolf (1993) argued for the inclusion of "extrinsic" as well as "intrinsic" data in phylogenetic inference. They suggested that such an approach involves a "consilience of inductions." What Kluge and Wolf failed to acknowledge, in their advocacy of using extrinsic characters, is that there is no method for determining homology or transformation for extrinsic data other than the results of intrinsic-character–based phylogenetic results themselves. Therefore, there is no independent rationale for treating such observations as part of a parsimony analysis. Kluge and Wolf (1993) quoted Mickevich (1982) in supporting their view, but they perverted the meaning of her statements to include character data beyond the type she intended.

Take, for example, host-parasite relationships, one of the most commonly treated cases in the coevolution literature, and a subject discussed in detail by Hennig. The sequence of host changes might be looked on as a problem in cospeciation, whereby parasite speciation parallels host speciation. That assumption was made by Brooks (1981) in his proposal for a "solution to Hennig's parasitological

method." However, the assumption would seem to be unwarranted because monophyletic groups of parasites are often observed to occupy distantly related hosts, with the clear implication that cospeciation was not involved. For example, restricted monophyletic groups of phytophagous insects may occur on conifers and angiosperms, or legumes and composites, strongly suggesting that host shifts within the group are not solely the result of cospeciation events. The treatment of such information as phylogenetic character data would result in either false conclusions about the phylogenetic relationships of the hosts or the needless introduction of homoplastic data into the character matrix.

Although host relationships, geographic occurrences, and ecological associations may all represent part of the evolutionary history for a group of organisms, there appear to be strong arguments for the view that the methodologies for assessing agreement among these data are different than those used to analyze data subject directly to the "laws" of inheritance, contrary to the views of Brooks (1981) and Kluge and Wolf (1993). Kluge (1997) remained undeterred in his view, asserting that host-parasite (coevolutionary) and biogeographic relationships will serve as more critical tests of phylogenetic theories than synapomorphies themselves, a notion whose justification he did not explain further. We suggest that agreement between extrinsic and intrinsic data represents an example of what Hennig referred to as "reciprocal illumination." Methods for evaluating extrinsic data are discussed further in Section III, Application of Cladistic Results.

Alignment of DNA Sequence Data

DNA sequences have in the past twenty years become accessible as a potentially vast source of characters for systematics. However, DNA sequences have not proved to be the phylogenetic Rosetta stone heralded by molecular systematic boosters in the 1980s and 1990s (e.g., Gould, 1985; Hedges and Maxson, 1996). DNA, just as morphology, requires processing and interpretation to transform its raw information into a form amenable to comparative analysis. A fundamental issue in molecular systematics is determining the correspondence of individual nucleotide sites among comparable DNA (or RNA) sequences sampled from a range of taxa, a process referred to as *alignment.* A sequence alignment identifies the characters that are compared among the taxa, which can have a profound impact on the resultant phylogenetic hypothesis.

There are three main types of sequences that are compared to address phylogenetic or population-genetic problems. These are protein-coding sequences, ribosomal RNA gene sequences, and noncoding regions such as introns, flanking regions, and the mitochondrial control region. Each of these presents different alignment challenges. For taxa that are relatively closely related, such as species within a single genus, alignments are usually straightforward, and relationships can be examined with sequences of almost any DNA region. The most common problem

at these low levels of divergence is finding a gene region that provides enough variation to distinguish among terminals, not the correspondence of homologous nucleotides across taxa. As the taxa being compared span deeper branches of the tree of life, divergences of DNA sequences become more dramatic, rendering the alignment process more important, more complex, and more problematic.

Alignment of protein-coding gene regions is often relatively easy because the sequence is organized into triplet codons that encode a corresponding amino acid sequence. Length variation in protein-coding genes, if it occurs at all, often takes the form of three-nucleotide (or multiples of three) additions or deletions, reflecting the addition or deletion of one (or more) amino acids from the polypeptide chain encoded by the DNA. The congruence criterion can be used to test theories of nucleotide site homology in protein-coding genes because if amino acid translations of sequences correspond to one another across taxa, this offers a measure of corroboration of the underlying nucleotide alignment. Likewise, it is relatively easy to determine if a sequence is not in the correct "reading frame" by translating it and looking for stop codons, which occur on average approximately 1 per 20 amino acids in random sequence, but not at all in a contiguous stretch of protein-coding DNA. An apparent out-of-frame sequence is almost always the result of a misread, and the source of the problem can usually be pinpointed by visual inspection of the raw output from the DNA sequencing machine.

Straightforward alignments, such as those found in protein-coding genes, are often done "by eye." Indeed, there is the view—although certainly not universally held—that if alignment is not obvious, then the homology of characters being compared is suspect, and any attempt at analysis of such data may lead to erroneous conclusions.

Non–protein-coding regions of the genome often present distinct challenges to alignment because they vary in length from taxon to taxon, a condition brought about by hypothesized insertions and deletions (indels). Note that while the mechanisms responsible for sequence length variation remain poorly understood, it is apparent that sequences can change in length by multiple bases in single events. This has important implications both for the methodology of aligning sequences and for the theory of character independence (see Sidebar 5). Thus, with only four possible nucleic acid character states at any given site, variation in the number of sites often makes determination of site correspondence across taxa less than clear-cut. For example, if we observed two sequences, GGACAT and GAACAT, we would probably infer that the second nucleotide in one of the sequences has undergone a G$\longleftrightarrow$A transition—a parsimonious explanation of the pattern observed. But if we observe a third sequence, GAGACAT, which is one nucleotide longer, the determination of site correspondence is less straightforward. Depending on whether we believe it is more plausible for two "gaps" to appear at different sites in the two shorter sequences or for there to be a single "homologous" gap and a mismatch at the other site (which we hypothesized to be parsimonious earlier),

there are at least three different potential arrangements of the nucleotide sites in these sequences with respect to one another:

```
GAGACAT   GAGACAT   GAGACAT
G-GACAT   G-GACAT   GG-ACAT
GA-ACAT   G-AACAT   GA-ACAT
```

This example shows that even a minimal amount of length variation among observed sequences can lead to interpretational ambiguity. Nonetheless, the length-variable mitochondrial 12S and 16S, and the nuclear 18S and 28S ribosomal RNA genes, show variation deemed informative at higher levels of relationships among animals and therefore have been extensively used in phylogenetic analysis over a broad range of taxa. Homologous nuclear and/or organellar ribosomal genes with differing lengths and names are also important in plant, fungal, and bacterial molecular systematics. For these gene regions, corroboration of sequence alignment via comparison with amino acid translations is not possible. Furthermore, visual alignment is untenable for any data set with a large number of taxa and substantial sequence variation because there is no way to evaluate anywhere near the number of actual possible alignments without the use of a computer (Wheeler, 1994; Slowinski, 1998).

The crucial nature of determining positional correspondence among nucleotides, especially its determination in non–protein-coding genes and for data matrices representing widely divergent taxa, would seem to mandate that alignment procedures be treated as an integral part of the phylogenetic analysis of such data. Nonetheless, Hillis et al. (1996), in a text dealing with molecular systematic methods, admitted that alignment was difficult and poorly understood, and they relegated discussion of alignment to a chapter dealing with sequencing and cloning under the subheading "Interpretation and Troubleshooting." More recently, Löytynoja and Goldman (2008:1634) warned, "[S]equence alignment remains a challenging task, and alignments generated with methods based on the traditional progressive algorithm may lead to seriously incorrect conclusions in evolutionary and comparative studies."

Proposed alignment methods for large, complex data matrices are of several types. Some authors have proposed using prior conclusions about relationships as a template for the sequential alignment of sequences (e.g., Mindell, 1991), but this approach is undesirable because it does not treat the sequence data as an independent source of evidence. The remaining methods can be divided into *similarity methods* and *parsimony methods.*

Alignment based on similarity has the same drawbacks found in grouping by overall similarity in nonmolecular data (discussed in Chapter 1). Nevertheless, many investigators working with molecular data (probably with no formal training in systematics) still employ phylogenetic analyses based on overall similarity, and it is therefore not overly surprising to encounter the use of similarity-based alignment procedures, such as CLUSTAL (Higgins and Sharp, 1988) and BLAST (Altshul et al., 1990). These have the expedient of being fast and free. For

example, BLAST is supported by the National Center for Biotechnology Information (NCBI), and alignments of sequences deposited in GenBank may be performed using it over the Web. This does not, however, obviate the fact that such approaches do not adhere to the basic criteria demanded of any rigorous phylogenetic analysis (see discussion of Optimality Criteria in Chapter 5).

The remaining approaches to alignment attempt to maximize the number of site correspondences or minimize the number of implied character-state transformations through the application of the parsimony criterion. There are, nonetheless, many ways that this problem might be solved. Confidence in having found the solution(s) optimal for the criteria employed requires that the method be computer implemented, as noted above. The first attempt at parsimony-based multiple sequence alignment was that of Wheeler and Gladstein (1992) with the program MALIGN. This program used multiple alignment orders to overcome the problem of bias introduced by pairwise alignment based on decreasing similarity. Such an approach requires substantial computing power; it attempts to produce a globally parsimonious alignment for all taxa under consideration by using multiple taxon addition orders rather than by using sequential pairwise comparisons based on decreasing similarity as is done by CLUSTAL and other phenetic alignment programs.

Traditional alignment methods rely on the insertion of gaps to accommodate the differences in numbers of nucleotide positions among the sequences being aligned (Fig. 3.6), based on a gap/change cost ratio. The calculus of alignment algorithms is such that the cost of inserting a gap must be higher than the cost of a nucleotide mismatch at a given site; otherwise the program will simply insert a gap every time there is a difference among the sequences. The higher the gap/change cost ratio, the more "expensive" the gaps are, and the fewer of them will be inserted in the alignment. In addition, there can be differential costs for gap initiation (the first implied gap site, usually a higher cost) and extension (subsequent gap sites after the first one). Variation of these parameters changes the relative cost of different alignment patterns, and alignments generated under different gap/change costs cannot be directly compared with one another and will be discussed further in Chapter 5.

It should be noted that alignment algorithms are often designed to conform to some model of molecular evolution—such as the increased weighting of transversions relative to transitions—or can be tailored to do so. The effects of invoking one or more such models should be examined empirically with regard to maximizing character congruence and parsimonious interpretation of the data, as has been done, for example, by W. C. Wheeler (1995), rather than being applied as a priori assumptions.

Because gaps do not represent observations, but are rather a complementary absent state inserted to accommodate inferred homology of adjacent nucleotide sites in length-variable sequences, they are often scored as "missing," thereby avoiding their interpretation as potential synapomorphies. An alternative approach to this problem is "optimization alignment," a parsimony-based technique proposed by Wheeler (1996). Under this method, insertion/deletion events are treated not as

```
Heliconius numata        GATACACGAGCTTATTTTACTTCAGCTACTATAATTATTGCAGTACCTACAGGAATTAAAATTTTT
Heliconius melopmene     GATACTCGAGCATATTTTACTTCAGCTACTATAATCATTGCAGTTCCAACTGGAATTAAAATTTTT
Heliconius erato         GATACTCGAGCCTATTTTACATCAGCCACTATAATTATTGCTGTTCCTACAGGAATTAAAATTTTT
Heliconius clysonymus    GATACTCGAGCTTACTTTACATCAGCTACTATAATTATTGCAGTTCCTACAGGTATTAAAATTTTT
Heliconius eleuchia      GATACCCGAGCTTATTTCACATCAGCAACCATAATCATTGCAGTACCTACAGGAATTAAAATTTTT
Heliconius demeter       GATACCCGAGCATATTTTACATCAGCAACTATAATTATTGCAGTACCTACTGGAATTAAAATTTTT
Heliconius burneyi       GATACTCGAGCTTATTTTACATCAGCTACTATAATTATTGCAGTTCCTACTGGGATTAAAATTTTT
Heliconius hecuba        GATACTCGAGCATATTTTACATCTGCCACAATAATTATTGCAGTTCCTACCGGAATTAAAATCTTT
Heliconius doris         GATACTCGAGCATATTTTACATCTGCTACAATAATTATTGCAGTTCCTACAGGAATTAAAATTTTT
Neruda aoede             GATACTCGAGCTTATTTTACATCCGCAACTATAATTATTGCAGTTCCAACAGGAATTAAAATTTTT
Eueudes vibilia          GATACTCGAGCTTATTTTACATCTGCAACTATAATTATTGCAGTACCTACAGGAATTAAAATTTTT
Dryas iulia              GATACTCGAGCATATTTTACTTCAGCAACTATAATTATTGCAGTCCCTACTGGAATTAAAATTTTT

Heliconius numata        GGGGTGATAGAAAAATTAAAATAACTTTTTTTAAAAAAAAAATAAATTACATGAATAAATGAATAA
Heliconius melopmene     GGGGTGATAGAAAAAWTAAAATAACTTTTTTT--TA-AAAAATAA---ACATAAATAATTGAATAA
Heliconius erato         GGGGTGATAGAAAAATTAAAATAACTTTTTTTAAAAAAA-------TTACATTAATAAATGAAATT
Heliconius clysonymus    GGGGTGATAGAAAAATTAAAATAACTTTTTTTAATAAAAAAAAA----ACATTAATAAGTGAAATT
Heliconius eleuchia      GGGGTGATAGAAAAATTTAAATAACTTTTTTT-------AAAATTTTTACATTAATAAATGATTTT
Heliconius demeter       GGGGTGACAGAAAAATTAAATTAACTTTTTTT-------AAAATTTATACATTAATAAATGATTTT
Heliconius burneyi       GGGGTGATAGAAAAATTAAAATAACTTTTTTTAAAAAAAAAA----TTACATGAATAAATGAATTT
Heliconius hecuba        GGGGTGATAGAAAAATTAAAATAACTTTTTTTAAAAAAA-------TTACATTAATAAATGAATAT
Heliconius doris         GGGGTGATAGAAAAATTAAAATAACTTTTTTT-CAAAAAAAA-----TACATTGATAAGTGAGTTT
Neruda aoede             GGGGTGATAGAAAAATTTAATAAACTTTTTTT-----GAAAAA--TTTACATAAATAAATGAATTA
Eueudes vibilia          GGGGTGATAGAAAAATTAAAATAACTTTTTTT--ATAGA------CTAACATAAATAAGTGAATAG
Dryas iulia              GGGGTGATAAAAAAATTAAAATAACTTTTTTTTTTTT-----ATTTTAACATAAATAAATGAATAA
```

Fig. 3.6. Alignment of sequence data. Two sets of sequences from the same group of 12 taxa. Above, a fragment of sequences from the mitochondrial protein-coding cytochrome oxidase I gene, showing the constant number of nucleotides and perfect site correspondence within the fragment Below, aligned mitochondrial 16S ribosomal DNA sequences, showing the insertion of gaps represented by dashes to accommodate the variation in numbers of nucleotides across taxa. (from Beltrán et al., 2007)

states but rather as transformations linking hypothesized ancestral and descendent nucleotide sequences (see Chapter 5 for further discussion of "optimization"). This insight led to the realization that calculating the shortest alignment and calculating the shortest tree based on that alignment could be collapsed into a single operation, referred to as *direct optimization.* As implemented in the program POY (Wheeler et al., 1996–2003; 2006a; Varón et al., 2007) direct optimization uses a specified gap/change cost to produce a tree with the smallest number of implied character-state transformations. Patterson (1988) presaged this view with his interpretation of entire DNA sequences as hierarchical characters with their variations representing nested character states. While this seems in principle to represent an important advance in the globally parsimonious treatment of DNA sequence data, it has the disadvantage of obscuring the character concept as outlined above, such that there no longer is an "alignment" or the familiar homologous nucleotide sites that are traditionally represented as columns in the data matrix. In fact, Wheeler et al. (2006a:341) argued that the concept of "primary homology"—the positional correspondence of parts that allows the recognition of characters—is "conceptually misguided and operationally unnecessary" as far as nucleotide sequences are concerned. That may be so, but it should be noted that even in POY, the sequences that are analyzed are assumed to be "homologous," and the nucleotides are maintained in their "sequential" front-to-back, linear order with respect to one another. These constraints obviously represent some sort of assumptions or hypotheses of primary homology (see also Chapter 5, Special Considerations When Dealing with Molecular Data).

Other Types of Character Information

There is an extensive literature on types of character information other than those discussed so far. Many of the techniques for collecting and dealing with such data were conceived at a time before cladistic theory became the obvious method of choice in systematics. Some approaches have lost their appeal because of the methodological problems they present during analysis, or because the data types have been largely supplanted by nucleotide sequences. Three of the now less-frequently-encountered data types deserve brief mention.

Frequency Data

The most commonly encountered frequency data come from *allozymes,* charged proteins that are separated across an electrical gradient by electrophoresis. The technique was enormously popular in the 1970s and early 1980s, and allozyme data still are commonly used in the study of populations. They have also been used to some extent in a phylogenetic context. Allozyme data have three properties that impinge on the way they might be analyzed: (1) a given allozyme locus may be polymorphic across populations or even among taxa, resulting in the lack

of a fixed character-state difference; (2) when there are fixed differences among taxa, they are often difficult to interpret as shared character states, with nearly all polymorphism unique to individual taxa (or populations); and (3) because the property measured by protein electrophoresis is the net charge of the entire protein (the sum of the charges of its constituent amino acids), "identical" electromorphs frequently represent heterogeneous groups of alleles at the level of DNA sequences (Barbadilla et al., 1996).

Allozyme data generally have been treated through the use of distances (see below) instead of as discrete characters. Mickevich and Mitter (1981) discussed three possible discrete-character approaches to analyzing such data: (1) the *independent allele model* in which each allele becomes a separate character; (2) the *shared-allele model* in which each locus becomes a single character whose states are combinations of alleles; and (3) a *"systematic" approach* in which separate enzymes are assumed to be characters, the states of which are defined to be the allelic combinations. It is the last approach that would seem to be most relevant if such data are to be used in cladistic analyses.

Distance Data

The intentional conversion of discrete character data, such as morphological structures or DNA sequences, into distances deliberately discards evidence pertaining to the nature of similarity, and consequently to kinship, and should therefore be avoided (Farris, 1981:21). As discussed in Chapter 1, the distance methods employed by pheneticists, while an advance over the charismatic authoritarian approach used before the advent of objective methods, were philosophically flawed and rendered obsolete by the advent of quantitative cladistic analysis.

Data gathered directly in a distance format include immunological data, DNA hybridization (annealing) data, and some others (see discussion of distances in Chapter 1). Of all data types gathered directly as distances, DNA-DNA hybridization data, which was touted (most flamboyantly by the laboratory of Charles Sibley) as providing a measure of overall divergence across the entire genome, have probably attracted the most attention.

The allure of molecular-level distance data is rooted in two ideas. First, that data derived from the genome are thought by some to speak more directly to the issue of evolutionary propinquity and divergence than do data derived from study of the phenotype. Second, if the rate of divergence were constant and could be quantified, we would then have a measure of evolutionary rate, a so-called molecular clock.

On the negative side, at least three arguments have been put forward against the use of data collected directly in the form of distances. First, distance data contain no information on homology despite assertions to the contrary. Gould (1985) claimed that DNA-DNA hybridization techniques as pioneered by Sibley had solved the problem of distinguishing homologies from analogies. What they do in fact is imply a single, linear measurement (a melting temperature of

heteroduplexed DNA from pairs of taxa compared), but they contain no direct indication of what that measurement might imply about degree of relatedness and certainly do not contain information on homology.

Second, DNA-DNA hybridization is technically difficult. The experiments are hard to control, and reciprocal measurements of the same pair of taxa can result in widely different estimates of degree of divergence between them (Sarich et al., 1989).

Third, there are methodological issues that bring into question our ability to analyze most data collected directly as distances. As noted above, the greatest attraction of distance data is their presumed ability to depict degree of divergence in a clocklike manner. In order to analyze data under the rate-constancy assumption, the data and the method of analysis must be *metric,* that is, satisfy the triangle inequality (see Sidebar 8 in Chapter 5 for a general discussion of "metrics"). The distance data must also fit the more stringent requirement of being *ultrametric.* Farris (1981) compiled considerable evidence contradicting the metricity of immunological data and clarifying that there was no evidence for an appropriate model with which to analyze DNA hybridization data. He further noted that the measures often used in the analysis of such distance data (e.g., Nei's and Rogers' distances) were not metric in their properties, and therefore any results derived from their use were meaningless when the data were analyzed under the assumption that they were metric.

Measurement Data

Some authors, particularly those advocating phenetic and statistically based techniques, have argued for the use of measurement data, often under the heading of "morphometrics" (e.g., Thiele, 1993; Zelditch et al., 1995). The seeming merit of such an approach would be the "relatively objective" nature of the data themselves. Yet, measurements are not necessarily so easily interpreted, and it would be naive to assume that they are not potentially susceptible to errors of accuracy and observation. Possibly the most important limitation of measurement data for phylogenetic analysis, however, is that measurements by themselves do not imply homology.

Even if we concede the potential utility of continuous variables, there exists little agreement on how to code them in a discrete-character format. Measurements by their nature occur as continuous variables that are not easily broken into the discrete character states required by most phylogenetic software. One approach to converting quantitative variation into discrete character states is called *gap coding* (Thorpe, 1984; Archie 1985). In this method, character states are identified by natural "gaps" in measurement or *meristic* data. For example, 2–5 mm and 10–12 mm might seem like reasonable alternate states (that could also be characterized qualitatively as "small" and "large"). But what if the ranges were 2–7 mm and 8–12 mm? In the latter instance, the range of variation within each of the character states is larger than the distinction between them. Measurement of additional

taxa often results in the amalgamation of seemingly "discrete" character states. It is easy to see that gap coding can lead to arbitrary divisions of what may actually be a continuum. The program TNT allows coding of continuous variables "as such" for cladistic analysis, and Goloboff et al. (2006) suggest that characters so coded can add support to topologies inferred from discrete characters.

Measurements in the form of ratios can be useful for describing the general attributes of form (e.g., whether a given structure is longer than wide), or the relative lengths of structures within or among taxa, and in eliminating correlations due to overall size from a series of measurements. Morphometric techniques are also potentially capable of offering descriptions of complex shapes. Nonetheless, in spite of the nearly total quantification of cladistics, the contribution of morphometrics in the analysis of phylogenetic relationships is still marginal.

Description of Characters for Publication

The advantages of careful character analysis and explicit coding of observations into a formalized data matrix discussed above are manifest, and it is thus quite surprising to find that numerous end products of systematic research do not contain any simple way to reconstruct the methods or examine the data that were employed to produce the tree. This is a particularly pernicious problem in journals devoted to "molecular phylogenetics" and high-profile, compressed-format publications that shunt critical detail to on-line appendices or abridge it entirely. For morphological features, as we have seen, a great deal of evaluative judgment goes into the identification of characters and states, and the results should be clearly represented in the publication, both by individual descriptions of each character and its states, and by a data matrix that shows the state scored for each taxon.

For molecular data, while character coding is relatively unambiguous, the alignment is deterministic of the resultant topology. Therefore, description of how homology among nucleotide sites has been determined, as well as the alignment (or the raw data and the parameters used to directly optimize them) should be accessible to the scientific community. It is not sufficient to simply provide GenBank accession numbers, for even if the alignment is unambiguous, sequences of varying length are frequently truncated to make a tidy block for analysis, and the data matrix as analyzed in the publication may be impossible to retrieve. Large data matrices are more amenable to reanalysis if they are made available in an electronic format, either on the researcher's Web site or (preferably) on a public database such as www.treebase.org or hosted on the Web site of the publication.

Selection of Taxa and Specimens

Up to this point in the chapter, characters have been the primary focus. Yet, the selection of taxa and specimens for systematic studies has implications of equal

importance. Yeates (1995) recognized what he called "exemplar" and "ground-plan" (intuitive) methods for representing taxa in coded character data. The entities that are studied and represent the tips of the branches in the cladogram are called *terminal taxa,* and these always involve a degree of abstraction and synthesis. For instance, characters from developmental stages or male and female specimens are usually viewed as different characters of the same entity, even though they may not have been observed from or are not actually present in single individuals.

Under the *exemplar method,* individual taxa serve as the terminals in the analysis, and the data are coded directly from them. If the terminals are species, then coding should be straightforward. If the terminals are higher taxa it is important that they exhibit only a single state for all characters being coded. If two or more states are present in the terminal, then two or more exemplars are necessary to accurately represent the diversity of states, as was discussed above under polymorphisms. The greater the variation in a terminal taxon, the greater the number of exemplars necessary to allow for correct optimization of the characters at the base of the clade (Yeates, 1995; Prendini, 2001).

If terminal taxa are not species, then we are faced with the question of how to diagnose them—to identify the character states that set them apart from other groups. The *ground-plan* (intuitive) method assigns character-state data to a terminal taxon on the basis of examination of the literature or a range of specimens. The "ground-plan" might be based on optimization of characters from a prior analysis. It must be "deduced" if no such analysis exists. Character assignments for a deduced ground-plan will be unproblematic if there is no variation for the character in the terminals. If two or more states exist for a given character in a terminal taxon, then that character must be coded as polymorphic. Otherwise, "deduced ground-plan" assignments can easily produce errors of optimization—that is, assignment of character state sets for hypothetical common ancestors—for the analysis as a whole (Nixon and Davis, 1991).

The above considerations apply primarily to higher-level analyses in which the terminal taxa are not species or where species were chosen to represent supraspecific taxa. When conducting species-level studies, such as revisions, the most important consideration will be to acquire the broadest possible sample of taxa and specimens representing them. This will allow for corroboration or refutation of past observations, as well as for the discovery of new information.

The search for specimens will most likely be guided by using the types of sources described in Chapter 1. In addition to corroborating previously studied characters and discovering new ones, examination of the broadest possible sample of specimens, including type material, will also allow the discovery of previously unrecognized, and therefore undescribed, taxa as well as the creation of new synonymy where necessary. The credibility of the results will be a reflection of the thoroughness of the search for relevant collections.

A final practical point worthy of mention is the need for proper documentation and preservation of voucher material. In nomenclature (Chapter 7), this is accomplished by designation and deposition of type specimens, but all systematic

research should be documented so that the exemplars under study can be compared with the taxa they are purported to represent, should the need arise later on. Vouchers usually take the form of museum specimens but may also be photographs or other documentary evidence if, for example, the specimen has been destructively sampled for DNA work. Publications should include information about vouchers, such as their unique identifying codes, collection localities, and where they physically reside as specimens. The failure to preserve or adequately document vouchers, like the failure to include explicit descriptions of characters and states, reduces the objective quality of empirical systematic research.

Suggested Readings

Brower A.V. Z., and V. Schawaroch. 1996. Three steps of homology assessment. *Cladistics* 12:265–272. [A discussion of characters and character states in morphological and DNA sequence data]

Farris, J. S. 1985. Distance data revisited. *Cladistics* 1:67–85. [An extended discussion of the properties of distance data and the difficulties involved in analyzing them]

Humphries, C. J. 2002. Homology, characters, and continuous variables. pp. 8–26. *In:* Macleod, N., and P. L. Forey (eds.), *Morphology, Shape and Phylogeny.* Taylor & Francis, London.

Lipscomb, D. L. 1990. Two methods for calculating cladogram characters: transformation series analysis and the iterative FIG/FOG method. *Systematic Zoology* 39:277–288. [Approaches to computing "cladogram characters"]

Lipscomb, D. L. 1992. Parsimony, homology and the analysis of multistate characters. *Cladistics* 8:45–65. [A concise explanation of morphological character analysis]

Mickevich, M. F., and D. L. Lipscomb. 1991. Parsimony and the choice between different transformations of the same character set. *Cladistics* 7:111–139. [A useful discussion of character analysis and the relationship between characters and cladograms]

Rieppel, O., and M. Kearney M. 2002. Similarity. *Biological Journal of the Linnaean Society* 75:59–82. [A thought-provoking discussion on character construction, vehemently opposed by Kluge, A. G. 2003. The repugnant and the mature in phylogenetic inference: atemporal similarity and historical identity. *Cladistics* 19:356–368]

4

Character Polarity and Inferring Homology

At the beginning of Chapter 3 we argued that despite the traditional notion that cladistics groups taxa "only on the basis of shared derived characters," the discovery and delimitation of characters and character states should take place without imposition of a priori hypotheses concerning which states are ancestral and which are derived. This is for both philosophical and practical reasons. Philosophically, systematists do not wish to bias their hypotheses with intuitive decisions about character polarity that may turn out to be incorrect. From a practical perspective, as we shall see in Chapter 5, polarization of characters is usually an automatic outcome of the rooting of a cladogram, so designation of polarity beforehand is not necessary. However, this was not always the case: Prior to the advent of computer-based analyses, Hennig and other cladistic pioneers routinely used prepolarized characters to construct their phylogenetic hypotheses and developed a specialized terminology to describe their practices. We have introduced some of these Hennigian terms in our historical synopsis of the development of systematic theory in Chapter 1, and because of their ongoing use in systematic training and research, we will explain them here in greater detail.

Terminology

Consider the rooted cladogram in Fig. 4.1. We begin with a tree we assume to be "correct"; that is, one we postulate to be so well-supported by numerous characters that we believe it accurately reflects the relationships of the taxa represented. The base of the cladogram is the *root,* or the position of the hypothetical ancestor. All character-state transformations on the tree occur on the branches leading up from the hypothetical ancestor.

Observation of similarity of a structure across a set of taxa—a hypothesis of homology—leads to five possible conclusions, which are illustrated by characters 1–5 on the tree (note that the structure of this tree is assumed, not determined by these exemplar characters).

Taxa	Characters 1	2	3	4	5
A	0	0	0	0	0
B	0	0	1	0	1
C	0	0	2	1	0
D	0	1	3	1	1

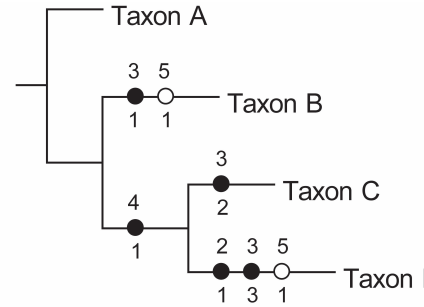

Fig. 4.1. Four taxa and five characters analyzed as unordered with characters plotted under slow (DELTRAN) optimization. The alternative, equally parsimonious ACCTRAN optimization of character 5 is a synapomorphy at (BCD) and a reversal in C.

Character 1 shows a feature thought to be homologous that is invariant among the taxa being examined, and neither supports nor contradicts any alternative hypotheses of grouping among them.

Character 2 shows a feature thought to be homologous that has two states, but all the taxa but one exhibit the hypothetically ancestral state. The derived state present in a single terminal taxon is termed an *autapomorphy* and provides no evidence of grouping.

Character 3 shows a feature thought to be homologous that exhibits a different state in each taxon. Without additional hypotheses of transformation among these states (such as an ordered transformation series, see Chapter 3), these states are also all *autapomorphies,* and this character also provides no evidence of grouping among the taxa.

Character 4 shows a feature thought to be homologous that varies in such a way as to provide evidence supporting the nested grouping of the taxa. In this case we see that state 1 is present in a subset of the taxa. This is a *synapomorphy.* Its complement, state 0, is a *symplesiomorphy,* a state shared by some taxa and the hypothetical ancestor at the root of the cladogram. It is important to recognize that synapomorphy and symplesiomorphy are relative concepts. A feature may be a synapomorphy for a clade with respect to other taxa that lack that feature, but a symplesiomorphy at a less inclusive level. For example, since all mammals possess mammary glands, the presence of that feature does not provide any further evidence of grouping for less inclusive mammalian taxa.

Up to this point, the distribution of states for all four characters can be explained parsimoniously on the tree—none of them requires any more implied character-state transformations than the minimum required by the number of states. There must be at least $n-1$ character-state transformations for n observed character states. Character 5 shows a feature thought to be homologous, but that cannot be viewed as a synapomorphy on this cladogram unless the character state has undergone a $1 \rightarrow 0$ reversal in taxon C. This character is referred to as an instance of *homoplasy.*

Note that the alternatives of two independent gains in B and D or a gain in the common ancestor of B + C + D and a loss in C are equally parsimonious scenarios for the transformations of this character, but imply different evolutionary events. The former scenario is referred to as delayed transformation (*DELTRAN*), because the character-state changes take place as far toward the tips of the tree as possible, while the latter scenario is referred to as accelerated transformation (*ACCTRAN*), because the changes occur as close to the base of the tree as possible. These alternatives do not affect the tree length or topology, but can have interesting implications for mapping of biogeographical and ecological data (see further discussion in Chapter 9, Optimization of Hypothetical Ancestral Character States).

Hennig argued that *synapomorphies*—shared derived characters—provide the only evidence for the existence of natural groups. This is the fundamental aspect of his arguments for the phylogenetic system; all of Hennig's other principles are subsidiary to it. Thus, in the Hennigian view, synapomorphy and homology are directly related. Nearly all formulations of systematic methods have treated the recognition of "homologies" as central to the success of the method. Many of these approaches have failed, however, because they did not recognize that even though all members of a group may share some homologous feature in common, if the feature occurs at a more inclusive level of generality it is not sufficient for group definition. Some familiar examples of characters that also exist outside the groups they have been used to define are poikilothermy (cold-bloodedness) and scales in the Reptilia—because these also occur in most bony fishes—and the presence of two cotyledons in the seeds of dicotyledonous angiosperms—which also occurs in the Cycadales, Ginkgoales, and Gnetales.

Another instructive example is tetrapod forelimbs (Fig. 4.2). The limbs of terrestrial vertebrates represent novel attributes—synapomorphies—relative to the pelvic and pectoral fins of fishes. These limbs *as limbs* do not represent distinctive attributes for bats, birds, and pterosaurs. Yet, wings in those groups are distinctive—apomorphic—for each of them. The concept of transformation is exemplified by the modification of pectoral fins into forelimbs and forelimbs into wings, the latter on at least three separate occasions, for birds, bats, and pterosaurs independently. Whereas the vertebrate pectoral fin-forelimb in all of its forms might be referred to as homologous, it is the nesting of the structural types into which it has been transformed that allows us to infer a hierarchy of relationships. The structural modifications represent synapomorphies for the groups that possess them. At the most general level, fins are synapomorphies. At a more restricted level, limbs are synapomorphic. And at the most restricted levels, wings are synapomorphic for three separate groups. The postulated transformation series is graphically depicted in Fig. 4.2. Additional examples are shown in Fig. 4.3. What these examples show is that homologies—as synapomorphies—form a nested set of relationships, and it is only when the hierarchic relationships of groups are supported by the nesting of synapomorphies that a "natural" classification results.

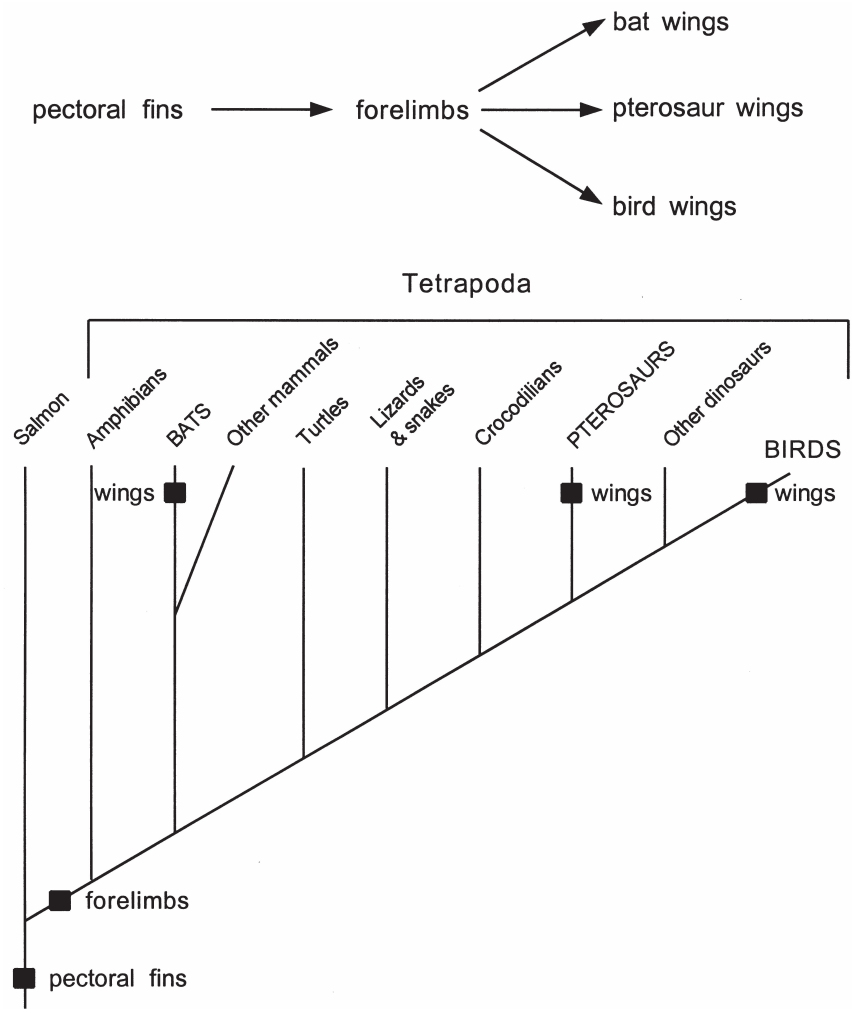

Fig. 4.2. Nesting of structural transformation of the vertebrate forelimb. Note that the modification of fins into limbs represents a synapomorphic character for the tetrapod vertebrates. The three distinctive modifications of forelimbs into wings represent apomorphic characters for restricted groupings within the Tetrapoda.

Tests of Synapomorphy

In Chapter 3 we discussed similarity and tests of similarity. But similarity by itself does not pick out nested sets of taxa. Indeed, in the counterintuitive calculus of data matrix construction, binary opposites (such as presence and absence) are viewed as being alternative instances of "the same" character. While there is no method to test the hypothesis that alternate states have been correctly grouped

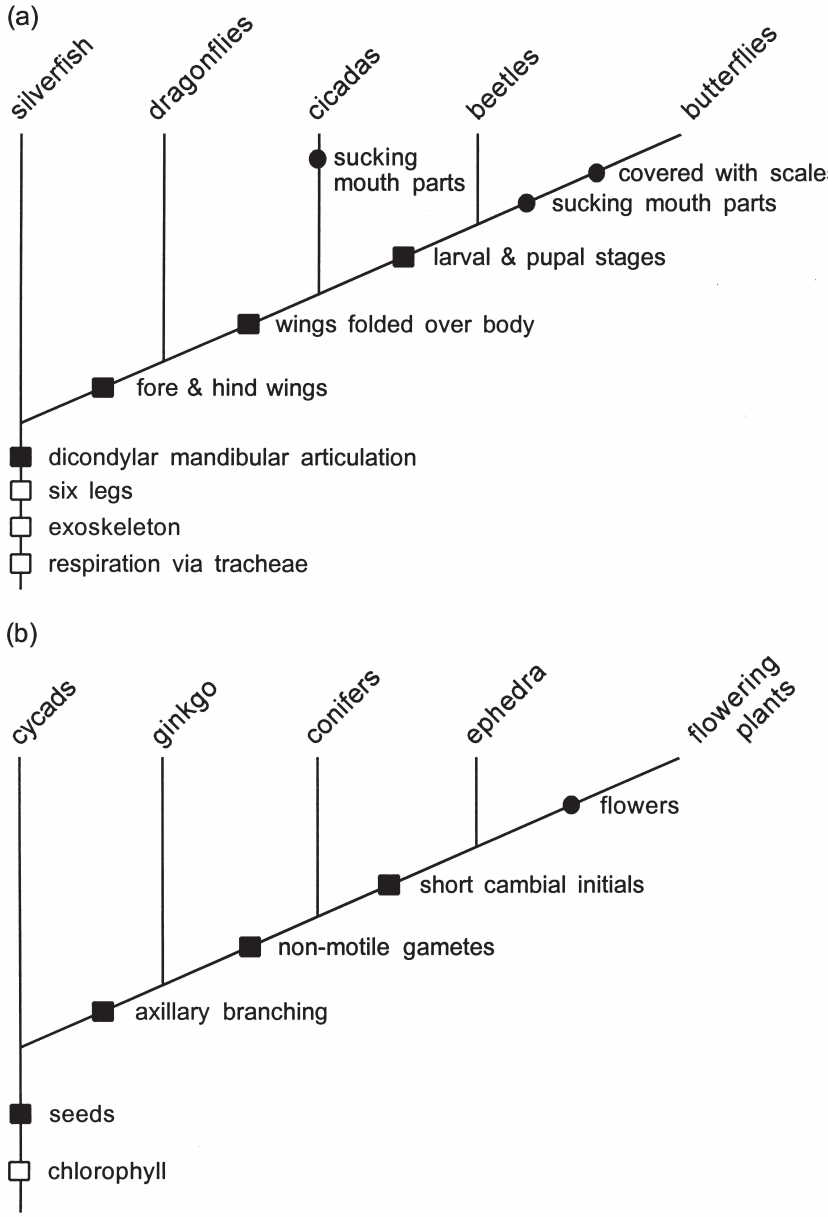

Fig. 4.3. The distribution of plesiomorphic and apomorphic characters in (a) insects and (b) seed plants. Open boxes = plesiomorphic Closed boxes = synapomorphic Closed circles = autapomorphic.

together as different instantiations of a character, it is possible to test whether two taxa share the same state due to symplesiomorphy, synapomorphy, convergence, or character-state reversal.

Hennig referred to the observation that characters can support groupings at different levels as the "heterobathmy of synapomorphy." Homologies had long been recognized, as had a systematic hierarchy. Nonetheless, the failure to consistently recognize the relationship between transformation and hierarchy—that only synapomorphies support monophyletic groups—had caused many groups to be formed on the basis of features that were not unique (synapomorphies that support a more inclusive group) or on the complementary absence of characters, thus creating unnatural groups united by combinations of synapomorphies and symplesiomorphies. The observation that characters were distributed in an unorderly way in these groups was sometimes called "mosaic evolution" by Mayr and others and cited (incorrectly) as a confounding limitation of cladistic methods (see also Farris, 1971). In fact, "mosaic evolution" is only confounding to phenetic methods under the assumption of equal rates of evolutionary change among lineages.

Congruence represents the test for theories of homology as synapomorphy. Congruence exists when two or more homologous features are observed as defining the same grouping of organisms. Character congruence as a powerful force for judging the weight of evidence was already well understood by Charles Darwin, who said:

> We may err . . . in regard to single points of structure, but when several characters, let them be ever so trifling, occur together throughout a large group of beings having different habits, we may feel almost sure, on the theory of descent, that these characters have been inherited from a common ancestor. And we know that such correlated or aggregated characters have an especial value in classification. (Darwin, 1859:426)

Note that by "correlation," Darwin was not referring to characters correlated due to a common intrinsic mechanism such as development (e.g., the length of the femur and the length of the tibia are strongly correlated with one another due to genetic and environmental influences on growth). Rather, he was referring to characters with no evident functional relation to one another, such as the presence of hair and mammary glands in Mammalia.

Congruence is the tool that helps to resolve the question of primary absence or secondary loss in features that are not present in some taxa. An excellent example of this occurs in snakes (and some other terrestrial vertebrates), in which we may find little or no evidence of limbs, fore or hind. In such cases we have two choices: to assume that the organisms never had limbs or to assume that the transformation has been from an ancestor with limbs toward complete secondary loss of all structures pertaining to the limbs. Obviously, the observed absence of limbs offers no evidence on the nature of limbs themselves—except that they are absent. Corroboration of the primitive absence theory or the secondary loss theory cannot come directly from the structures themselves. Snakes, on the basis of attributes other than limb structure, such as morphology of jaws and reproductive

structures, show relationships with lizards. Hypothesizing secondary loss of limbs in snakes is "congruent" with the distribution of those other attributes. Asserting that snakes have never had legs or arose from legless ancestors would place them outside the Tetrapoda and require that most of their osteology and anatomy be independently derived, as for example from members of the Agnatha (lampreys and hagfish). Thus, in this case, congruence as understood through the application of the parsimony criterion offers the strongest evidence that the ancestor of snakes possessed limbs, even though the evidence might be construed as indirect. Further evidence comes from fossil snakes with legs (e.g., Tchernov et al., 2000) although the interpretation of those fossils as snakes is itself made possible by the congruence of other osteological characters. The same arguments could be made for the absence of chlorophyll in mycoheterotrophic angiosperms and the absence of wings in lice and fleas.

Interpreting the Literature on Homology and Synapomorphy

Most authors agree that the explanatory power of phylogenetic analysis rests on theories of homology. However, comparing even the most thorough and cogent available discussions of homology and its bearing on phylogenetic inference (e.g., Patterson, 1982; Rieppel, 1988; de Pinna, 1991) may leave the reader confused. Terminology is one source of confusion. Different authors may use the same terms to describe related but distinct concepts; for example, there are multiple definitions for the words homology, synapomorphy, and homoplasy. In a similar fashion, the nature of tests for "lower-level" (similarity) theories and "higher-level" (synapomorphy) theories are also in dispute. We shall discuss these two aspects—terminology and tests—in turn.

First, terminology can be understood by considering the information in Table. 4.1. We can see that some authors use the term *homology* to refer solely to "topographical and structural relations of similarity." Others, however, use the term as a synonym of synapomorphy, leaving "homology as observation" without an applicable term. The term "primary homology" has been used by de Pinna (1991) as a substitute. *Apomorphy* would seem to be synonymous with "homogeny" of Lankester (1870). Whereas the former term, proposed by Hennig, has now achieved widespread usage, the significance of the latter was apparently not appreciated at the time of its proposal and consequently was never widely adopted.

Second, with regard to tests, on the one hand we might consider the viewpoint of Brower and Schawaroch (1996:268) who argued that "homology cannot be determined prior to cladistic analysis." From this perspective, similarity of structure across a group of taxa is not viewed as a test of homology, but rather as a factor that compels us to hypothesize homology. A contrary view was advocated by Lipscomb (1992) who considered similarity a valid test of homology, such that among all possible transformation series for the set of possible conditions of a homologous feature, those that entail transformations between states that are least similar will be rejected. Lipscomb (1992:52), unlike de Pinna (1991), treated

Table 4.1. Homology: Relationships of Concepts and Terminology

Author	Topographical and Structural Similarity	Character Congruence	Character Incongruence
Owen (1843)	homology	—	analogy
Lankester (1870)	homology	homogeny	homoplasy
Patterson (1982)	homology-synapomorphy	synapomorphy	homoplasy
de Pinna (1991)	primary homology	secondary homology	homoplasy
Lipscomb (1992)	homology	synapomorphy	homoplasy
Brower & Schwaroch (1996)	observation	homology-synapomorphy	homoplasy
Hennig (1966)	homology	synapomorphy	convergence
Mayr (1982)	homology	homology	convergence/parallelism
G. Ball (various)	homology	synapotypy	convergence/parallelism

Source: Adapted and expanded from Rieppel (1988)

theories of homology as based on "the meticulous examination of all details" and concluded unequivocally that theories of homology are available for test at the level of observation and simple comparison across taxa.

In agreement with the point originally emphasized by Patterson (1982), nearly all authors—including de Pinna, Lipscomb, and Rieppel—agree that hypotheses of synapomorphy are tested by character congruence. The differences of opinion among these authors rest on whether homology and synapomorphy are treated as identical concepts. Note again, however, that none of these concepts depend on metaphysical claims about ancestry.

Homoplasy (Convergence and Parallelism)

Hennig, in his "auxiliary principle," made it clear that character-state identity should be accepted as homology in the absence of evidence to the contrary. This approach was introduced in Chapter 2 (see Parsimony and Ad Hoc Hypotheses). As explained by de Pinna (1991:371):

> All similarities are deemed homologous initially, and non-homology is disclosed by a pattern-detecting procedure [parsimony]. . . . If the analysis supports a single position for a putative synapomorphy, then the condition shared by the various taxa with that derived condition are [*sic*] corroborated as homologous. If a shared derived condition turns out to require independent origins in the overall scheme of relationships, then an event of non-homology [homoplasy] has been discovered.

Thus, as shown in Fig. 4.1, independent hypotheses of homology may imply conflicting patterns when testing theories of group relationships. The observer is then

forced to decide if similar structures arose more than once through parallel evolution or convergent evolution as analogs, or if the feature has been lost in some members of the group that share it (such as snakes and legs), or if using existing approaches we are unable to distinguish between things that are actually different. In the last case we are left with the conclusion that our observations are most likely mistaken. The apparent multiple evolution, reduction, or re-evolution of structures was first referred to as *homoplasy* by Lankester (1870) (see Table 4.1). The resolution of such conflicts is adjudicated via application of the parsimony criterion, as discussed in Chapter 2. We will see in Chapters 5 and 6, under the discussion of character weighting, that additional logically consistent criteria have been advanced to further refine our attempts to unravel apparently conflicting hypotheses of homology.

There are many instances in the precladistic literature of the a priori invocation of parallelism or convergence—that similar-appearing structures have developed from different precursor types. The arguments vary from case to case, but invariably they are not based on a rigorous evaluation of the character data.

Consider the following example. Within the insect order Hemiptera, members of the family Miridae were grouped into subfamilies by Fieber (1860) primarily on the basis of morphological variation in the pretarsus—the claws and associated structures. In Fieber's system, and subsequent work of O. M. Reuter, the pretarsus was the single most important structural feature for subfamily recognition. The works of Fieber and Reuter gained wide influence and were generally considered valid until the 1930s. At that time the respected British worker W. E. China (1933) observed that the structural importance of the pretarsus had been exaggerated and that it was "far too plastic to serve as a fundamental group character." The argument, as couched by subsequent workers, was that similarity of structure was the result of adaptation to similar life habits—*convergence.* The source of structural variation in the pretarsus of the Miridae is at best poorly understood. But, in the view of W. E. China, similarity of form did not necessarily imply common origin. To this day, however, pretarsal structures are used to recognize systematic groupings within the 10,000 described species of Miridae, not only because of the discrete variation they manifest but also because that variation is congruent with the distribution of other features in the group.

The rise of cladistics and "tree-thinking" (interpretation of putative adaptations in a phylogenetic context—see Chapter 9) has diminished the ad hoc discussion of parallelism and convergence. While in the past the existence of these phenomena was often hypothesized a priori for particular features in isolation, the interpretation of homoplastic features is now conducted through the results of cladistic analyses of matrices composed of numerous characters.

Homology Concepts as Applied to Nucleotide Sequence Data

Before we leave the discussion of homology, the issue of DNA and RNA sequence data should be addressed. Whereas homology statements have traditionally involved morphological structures of at least moderate complexity on a varied morphological landscape, nucleotide sequence data do not readily satisfy either of

these requirements. Nonetheless, analysis of sequence data depends on theories of site homology and nucleotide transformation.

DNA and RNA are composed of only four nucleotides: the purines adenine and guanine, and the pyrimidines cytosine and thymine (uracil in RNA). Therefore, the question of whether two or more sites that occur in apparently similar topographical positions are actually homologous—simply because they are occupied by the same nucleotide—may be less confidently judged than whether the wings of a bird are homologous with the forelimbs of a non-volant tetrapod. Indeed, the equivalence of nucleotide (sequence) position in the genomes of different organisms is at times far from self-evident. Some parts of the genome, such as protein encoding regions, contain similar numbers of nucleotides across a broad range of taxa. Other parts, such as ribosomal RNA genes, may have variable numbers of nucleotides across a range of taxa, with some areas deleted, some areas duplicated, or anomalous segments inserted. These types of variation complicate the task of comparing the nucleotide sequences among taxa. Possible approaches to dealing with this issue were discussed in Chapter 3 under Alignment of DNA Sequence Data.

The problem of determining homology in DNA and amino-acid sequence data has been erroneously described as a statistical problem by Patterson (1987) and others. Under this characterization, if "identical" portions of the genome from two different organisms are written out side-by-side, about 25 percent of the nucleotide positions will match by chance alone, if it is assumed that each of the four nucleotides occurs with equal frequency. Matching frequencies of greater than 25 percent could, then, be explained as either the result of homology or convergence.

The "statistical" viewpoint has been explicitly rejected by Mindell (1991), Brower and Schawaroch (1996), and others because it treats determination of sequence homology as one of comparing the numbers of sites in common, an approach that is strictly phenetic. If the method of homology determination in DNA sequences is to correspond to that used for morphology, then it is not the number of sites in common that is of interest, but to what degree we can find sites (or groups of them) that are unique across groupings of taxa. Because there are only four possibilities for change at any site, the problem of homology determination may be more difficult than in the case of gross morphology. Nevertheless, we are still observing changes at corresponding sites as they occur across taxa, not the sum of changes (differences) for a nucleotide string across taxa. In the end, correct matching (or direct optimization, sensu Wheeler et al., 2006) should minimize the number of inferred nucleotide transformations across the taxa being compared.

At the level of the locus, as opposed to individual nucleotides, Fitch (1970) proposed, and others—including Patterson (1987)—have adopted, the term *paralogy* for use in reference to duplicated gene regions, those that exist as multiple similar, if not identical, copies. De Pinna (1991) noted that this usage corresponds to the usages of *serial homology, mass homology,* and *homonomy* in morphology,

that is, for structures that occur in multiple copies in the same organisms. Paralogous genes, according to Fitch, stand in contrast to *orthologous* genes in which "the history of the gene reflects the history of the species." De Pinna concluded that there appears to be nothing special about homology in RNA-DNA sequence data as compared to morphology, only that new terms have been created to describe existing concepts. It is, however, increasingly evident that many genes have been assembled by duplication and rearrangement of pieces of other genes (Lynch and Conery, 2003), rendering the genome a patchwork of DNA sequences with multiple hierarchical levels of homology both across taxa and within individual organisms.

Natural Groups

Groups that can be recognized on the basis of synapomorphy are referred to as "natural" or *monophyletic*. Hennig grasped the unequivocal importance of the concept of monophyly. Under his conception (see also Nelson, 1971; Farris, 1974), such a group has the following attributes:

A *monophyletic* group contains the common ancestor and all of its descendants. Such groups are characterized by synapomorphies. It is now widely held that one of the central aims of systematics is to develop a natural classification in which only monophyletic groups are named as "groups." One might conclude that if all groups recognized in a classification must be monophyletic, then there should be no need to distinguish among nonmonophyletic assemblages of taxa. Hennig, nonetheless, recognized two other types of "groups."

A *paraphyletic* group contains the common ancestor and some—but not all—of its descendants. Hennig defined this type of assemblage as being characterized by a mixture of synapomorphies and at least some plesiomorphies.

A *polyphyletic* group contains some of the descendants of a common ancestor but not the common ancestor itself. Hennig defined this category as being characterized by the possession of convergent character states.

These definitions can be visualized in Fig. 4.4.

Hennig's definitions, although generally workable, make reference to metaphysical concepts that are neither evident from inspection of a cladogram nor testable because, as was discussed in Chapter 2, ancestors are not empirically discoverable, and the internal nodes of cladograms do not correspond to any actual observable entities. Thus, we suggest that a useful way to distinguish between monophyletic, paraphyletic, and polyphyletic taxa is as follows: Imagine the Tree of Life as actually made of wood. Any single branch or twig that can be broken off the tree at one point constitutes a monophyletic group. A paraphyletic group is such a branch with at least one subordinate branch or twig broken off of it. A polyphyletic group is one composed of two or more branches broken off the tree. Alternative character-based definitions for the groups recognized by Hennig are portrayed in Fig. 4.5.

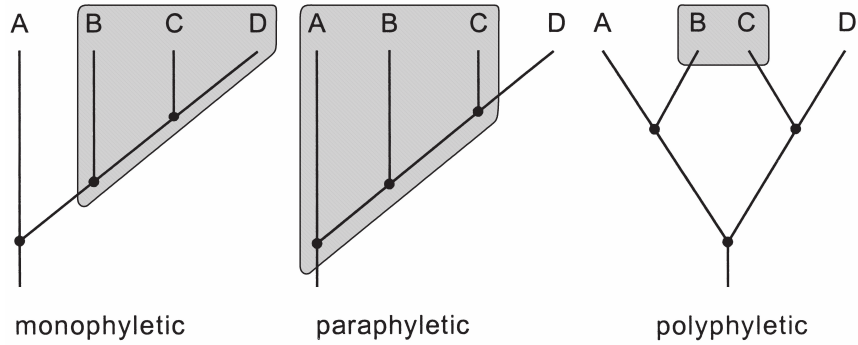

Fig. 4.4. Monophyletic, paraphyletic, and polyphyletic groups. In the sense of Hennig's definitions given in the text, ancestors are represented by the interior nodes of the cladogram.

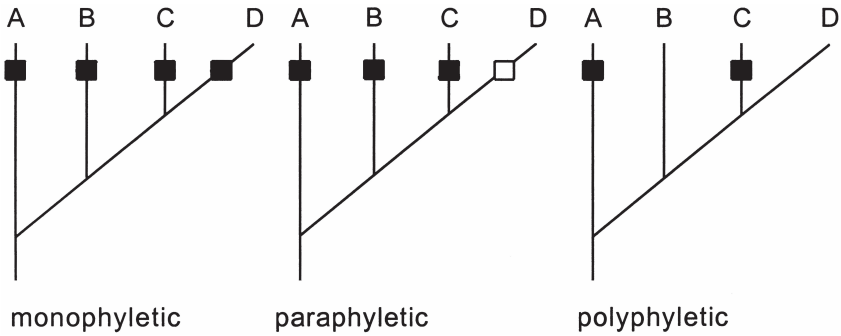

Fig. 4.5. Character distributions for groups under the definitions of Farris (1974). Closed boxes indicate the distribution of the uniquely derived states for a character, □ indicate reversals. In the monophyletic group A + B + C + D, all taxa possess the group-defining feature in its uniquely derived and unreversed condition. That same group becomes paraphyletic when the condition of the feature is reversed in taxon D, and D is therefore not included as a member. The features uniting taxa A + C are not uniquely derived, and therefore the taxon is polyphyletic.

The monophyly concept of Hennig thus meshes well with the theory of descent with modification, grouping together all members belonging to an evolving lineage, and excluding none of them. As discussed elsewhere in this book, if classifications contain paraphyletic and polyphyletic groups, the descriptive capacity of the characters used to define groups is compromised. Thus, the recognition of monophyletic groups not only brings classifications into agreement with genealogy, if that is what we take them to mean, but also serves the broader scientific purpose of recognizing groups for which there is maximum evidential support.

Sidebar 6
The Varied Conceptions of Monophyly

Monophyly has been defined by some authors as "a group, all of whose members are descended from a single ancestor." So phrased, the definition allows for virtually any grouping to be monophyletic. Willi Hennig and others used *monophyly* in a more restricted sense to mean "*all* descendants of a single (common) ancestor." The merits of both definitions have been argued on the basis of historical precedence. Monophyly in the sense used by Hennig is thought by most authors to be the same as that of Haeckel (1866), and because Haeckel first used the term, it is this usage that should have precedence.

North American authors including Simpson, Mayr, and Ashlock (1971), have each argued that the term monophyly has long been applied to groups that in Hennig's sense are paraphyletic, but that those groups nonetheless merit formal recognition. These authors invoke precedence on the basis of long-standing usage, but less for reasons of methodological consistency than for retaining groupings in existing classifications.

Paraphyletic groups have cultural inertia in systematics, manifested in the names of divisions of natural history museums (such as "Invertebrate Zoology") and professional societies ("Ichthyology and Herpetology"), but very few active biologists would advocate the formal recognition of taxa that are manifestly not monophyletic. Most paraphyletic groups that persist in classifications do so only because they have not been the subject of a cladistic revision.

Determining Character Polarity

In Chapter 3, we discussed characters and their states, and how states may be ordered into transformation series. However, the quality that makes a synapomorphy a "derived" feature is the directionality of character-state transformation from the more to the less general condition. The determination of character polarity has traditionally been viewed as the sine qua non of the Hennigian method, whereby taxa are grouped by "special" similarity, as opposed to overall similarity. Using the traditional Hennigian approach, polarity was usually determined on a character-by-character basis during the data-gathering phase, and the controversial interpretation of individual character polarities led to extended discussion in papers from the 1970s and early 1980s. Computer algorithms, such as the Wagner algorithm originally described by Farris, minimize the number of character-state changes among taxa without regard to the polarity of the characters (as long as the characters have symmetrical transformation costs). The orientation of the network created by the algorithm is then determined by specifying one taxon to identify the root (Fig. 4.6;

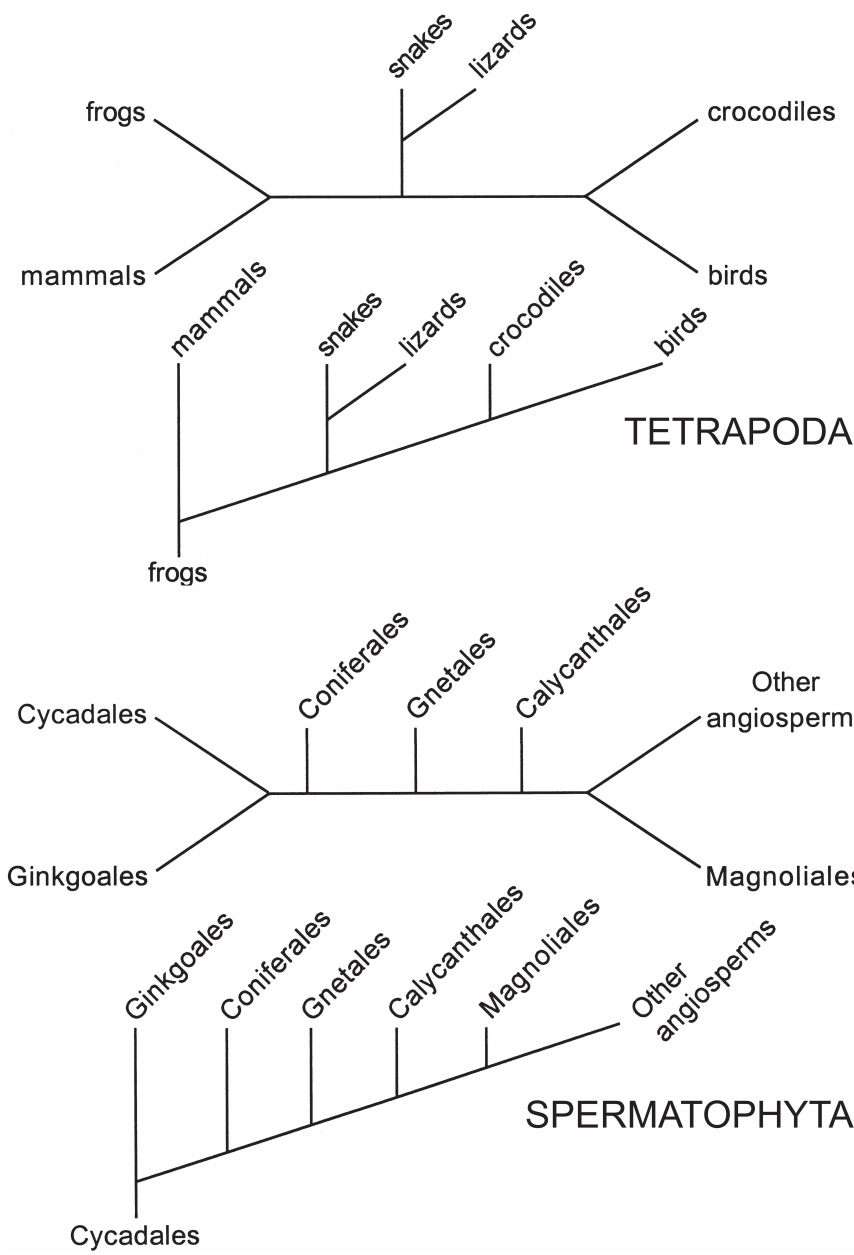

Fig. 4.6. Unrooted networks (above) for Tetrapoda and Spermatophyta, and their respective cladograms (below). Polarities of characters used to form the networks are determined by choice of an outgroup. Frogs are chosen to root the tetrapod cladogram because, among other attributes, they lack the distinctive fetal membranes found in all other members of the group. Cycads are chosen as the basal seed plants because, among other attributes, they lack the axillary branching found in all other seed plants.

see further discussion in Chapter 5). Under this formalization of cladistics, all of the literature describing methods to determine individual character polarity really addresses a non-problem. It is only the choice of the outgroup and the position of the root that matter. Nevertheless, we conclude our discussion of character analysis with a consideration of this historically and heuristically important concept.

Rooting by Outgroup Comparison

Character-state polarity is determined by the choice of an *outgroup,* or *root.* This approach was implied in the works of Hennig, although not using this terminology. The outgroup method has been discussed by a number of authors (e.g., Farris, 1972; Watrous and Wheeler, 1981; Maddison et al., 1984; Nelson, 1985) and critically reviewed by Nixon and Carpenter (1993). Outgroup comparison, as modified from the description of Nixon and Carpenter (1993), proceeds as follows:

1. Define or circumscribe ingroup taxa on the basis of presumed synapomorphies.
2. Select outgroup(s) on the basis of synapomorphies at a more inclusive level (higher level of generality), usually as based on a higher-level cladistic analysis.
3. Perform unrooted parsimony analysis.
4. Root cladogram using one of the outgroups.
5. Read character polarities from cladogram.

In practice, historical classifications often serve as a null hypothesis for ingroup membership and outgroup selection. For example, if we are interested in relationships among members of a genus, we might select a member of a different, presumably closely related genus as the outgroup; it is not necessary to select a member of the sister taxon, or even to know precisely what the sister taxon is. It is advisable to include several outgroup taxa in the analysis because inclusion of a single outgroup taxon does not provide a test of ingroup monophyly. Multiple outgroups may also aid in correctly determining polarity of homoplastic characters that could otherwise result in spurious group formation. In general, the more outgroup taxa included, the better, because such an approach represents a more severe test of ingroup monophyly.

In some cases, no known group may serve as an obvious candidate for the outgroup. Then, the root for the ingroup should be determined as occurring along the internode that provides the most parsimonious tree length when a hypothetical ancestor is joined to the ingroup (Lundberg, 1972; Nixon and Carpenter, 1993).

You might imagine that states for all characters are derived for the ingroup, or at least some of its members, and that in the outgroup all states are primitive. In many cases, some members of the ingroup share the ancestral state with the outgroup, and the taxa exhibiting the derived state may represent a subordinate clade within the ingroup. Although it may less commonly be the case, the condition for

a given character in the outgroup may also be derived (an autapomorphy). In such an instance, the character will add no information to the phylogenetic analysis unless it shows variation within the ingroup.

The breadth of distribution of a character under study has been referred to as the "level of generality" of a character. Those character states that occur in all members of a group would be described as occurring at a high level of generality, whereas those that have a restricted distribution within the group would be referred to as having a lesser level of generality.

Sidebar 7
Discredited Methods of Determining Character Polarity

Several methods purporting to be useful for determining character polarity have been proposed in addition to outgroup comparison and the ontogenetic criterion. These approaches have been largely abandoned by modern-day phylogeneticists in favor of logically based criteria related to minimization of homoplasy. These discredited methods include the following:

1. *Common equals primitive.* This criterion suggests that characters more widespread among taxa are primitive relative to characters of more restricted taxonomic distribution. There are many instances in which taxa with derived features are more numerous than their sister taxa with complementary symplesiomorphies, and this maxim is simply not a reliable guide for inferring character polarity.
2. *More complex characters are derived relative to less complex characters.* The subjectivity of this criterion would seem self-evident. The basis for complexity is seldom defined, let alone understood from a developmental or genetic point of view. Indeed, reduction and loss seem frequently to represent derived conditions.
3. *Characters found in fossils are primitive relative to those found in living taxa.* The rejection of the "paleontological method" in cladistics early-on forced the abandonment of this approach, going hand in hand with the recognition of fossils simply as additional taxa subject to analysis, and at most indicating minimum age for a taxon (see excellent discussion in Schoch, 1986).
4. *Chorological progression.* In this view, the more advanced characters (and taxa) are to be found further from the geographic center of origin for a group. This "progression rule," which was advocated by Hennig and some later authors (e.g., Brundin, 1981), rests on the unwarranted assumptions that "primitive" and "advanced" taxa can be recognized a priori, and that what might be true of one taxon in this regard should also be true of others (see Platnick, 1981a).

Ontogenetic Data and Character Polarity

Outgroup comparison, as described above, has sometimes been referred to as the "indirect method" of determining character polarity. The venerable notion that developmental patterns directly reflect phylogenetic relationships is nearly 200 years old (von Baer, 1828; Barry, 1837) and was popularized as the Biogenetic Law ("ontogeny recapitulates phylogeny") by Haeckel (1866). Hennig (1966:95) explicitly recognized the potential value of ontogenetic data in determining character polarity, and Nelson (1973, 1978b) subsequently proposed that comparative evidence from character-state transformations that occur during the development of individual organisms offers a "direct method" for determining character polarity. Nelson (1978b:327) stated the case for using ontogenetic data in determining character polarity as follows:

> Given an ontogenetic character transformation, from a character observed to be more general to a character observed to be less general, the more general character is primitive and the less general advanced.

As an example, gill slits occur in the embryos of all vertebrates and persist in the adults of relatively basal vertebrate groups (fishes) but are transformed into other structures in the adults of relatively more derived vertebrates (tetrapods). One may therefore assume that the more general condition (that of possessing gills) represents the ancestral condition, and the modification of gills into other structures in adults represents the less general—derived—condition.

To better understand the nature of ontogenetic data, let us examine one of many possible available examples: that of the antennal trichobothria in the assassin bugs of the families Pachynomidae and Reduviidae (Insecta: Hemiptera: Heteroptera). Virtually all Heteroptera have 5 larval stages, after which they become adults. It is known that some morphological details differ between the first instar and the later larval instars, and that they may differ again in the adult, thus offering potential evidence of ontogenetic transformation. Trichobothria are specialized setae that occur widely in the Heteroptera (Fig. 4.7). They occur on the antennae in only a few Gerridae and in all Pachynomidae and Reduviidae, in all postembryonic life stages.

The antennal trichobothria of Pachynomidae and Reduviidae were surveyed by Wygodzinsky and Lodhi (1989). The patterns of ontogenetic and between-group variation demonstrated in their work are summarized in Table 4.2. Although the data are not complete for all taxa listed, we might draw the following conclusions: (1) the most general condition is 1 trichobothrium, this situation occurring in every nymphal instar and adults of at least some taxa; (2) the general condition does not occur in all first instar larvae, nor in all larvae; (3) number of trichobothria increases during progression through the life stages in some taxa; and (4) trichobothrial numbers apparently never decrease during ontogeny.

Nelson (1978b) stated that he knew of no examples that would falsify his restatement of Haeckel's "biogenetic law" quoted above. Nelson's proposal has been viewed in three different ways: true, partly true, and false.

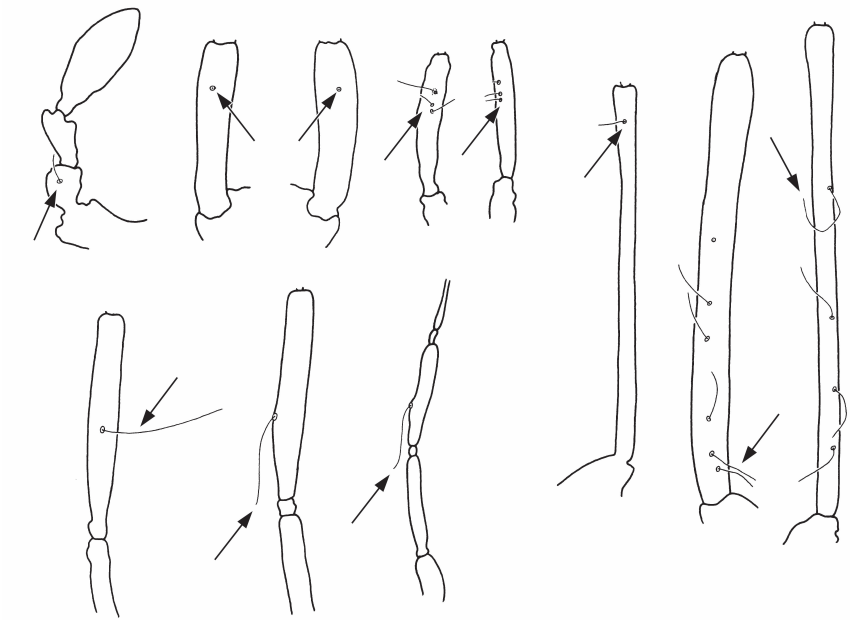

Fig. 4.7. Distribution of antennal trichobothria on antennal segment 2 (indicated by arrows) in the larval stages and adults of some species of Pachynomidae and Reduviidae (from Wygodzinsky and Lodhi, 1989).

Table 4.2. Numbers of Antennal Trichobothria on Antennal Segment 2 in the Pachynomidae and Reduviidae

Taxon	Instar 1	Instars 2–5	Adult
Pachynomidae (*Aphelonotus*)	—	—	1
Reduviidae			
Cetherinae (*Eupheno*)	—	1	5
Harpactorinae			
Amphibolus	3	4	4
Arilus	—	11	12–15
Castolus	3	—	9
Heniartes	—	7	12
Notocyrtus	6	—	8
Phymatinae	1	1	1
Reduviinae (*Leogorus*)	—	1	8
Salyavatinae (*Salyavata*)	1	1	10
Triatominae (*Triatoma*)	—	1	10

Source: Data from Wygodzinsky and Lodhi (1989)

Weston (1988) agreed with Nelson's conclusion that the direct method occupies the logically fundamental position in cladistic analysis because it provides information on synapomorphy without recourse to previous cladistic analyses. Weston interpreted some criticisms leveled at Nelson's approach as little more than redefining terms in order to obviate the argument. He argued that ontogenetic information provides the most basic synapomorphy hypotheses in cladistics but, in an apparent contradiction of Nelson's stance, allowed that the information may not be infallible. This point had been made six years earlier by Rosen (1982:78), who noted that:

> As a practical matter the problem of encountering incongruence among ontogenetic character transformations within a given taxon must be addressed. It matters little whether the cladistic disagreement posed by such incongruence is due to real reversals . . . or to analytic failure; the decision as to which transformations specify the true hierarchy (of character states or organisms) must be decided, as in all cladistic disagreement, by the parsimony criterion.

Q. D. Wheeler (1990), using an empirical example from beetle ontogeny, reasoned that *character adjacencies*—the positions of character states relative to one another in a transformation series—can be directly observed in ontogeny but polarities cannot, and that patterns of character distributions can be observed but their causal processes cannot. Wheeler viewed Nelson's rule as describing an indirect method for determining character polarity because it relies on a second taxon to estimate polarity. Furthermore, in Wheeler's view, successful polarization is dependent on the second taxon that is chosen for comparison. Wheeler concluded that Nelson's rule is a special case of parsimony and has the advantage of allowing for conclusions based on fewer comparisons than would be necessary using character data derived from only a single life stage. He also noted, as had Weston, that there are some situations in which the method does not work, as is the case with simple outgroup comparison.

Nelson's assertion that there are no falsifiers to the biogenetic law was attacked by Kluge (1985) with the observation that contradictory ontogenies (e.g., neotenic salamanders) are known. Kluge further criticized Nelson's view because he interpreted "more general" to mean commonality, with the suggestion that the argument could be reduced to "common equals primitive." However, as pointed out by Weston (1988), the more general character state is possessed by all taxa that possess the less general character state as well as some that do not; thus, Kluge's equating common with primitive is false (see also Sidebar 7, Discredited Methods of Character Polarity Determination).

Let us examine these arguments in light of the example given in Table 4.2 for reduviid antennal trichobothria.

Can polarity be determined directly? Our example suggests that ontogenetic data cannot determine polarity on the basis of a single taxon. If we had only two taxa, one with a single antennal trichobothrium in all life stages (Phymatinae)

and one with multiple trichobothria in all life stages (*Amphibolus*), the question of what condition was general—and therefore primitive—could not be answered. Lacking information on the Pachynomidae, the sister group of the Reduviidae, one still might not come to an unequivocal conclusion concerning the general condition in the Reduviidae, depending on the sample of taxa available. Thus, Wheeler's insight that ontogenetic evidence represents a special case of outgroup comparison, because polarity determination requires more than one taxon, would seem to be correct.

Are there any falsifiers? The answer to this question would seem to have two parts. The patterns of trichobothrial distribution, as far as they are known, do not contradict the conclusion that a single trichobothrium is the general condition. That is, there are no known instances in which there are multiple trichobothria in the larval stages and a single trichobothrium in the adult. However, the general condition does not occur universally in larvae; as seen in Table 4.2 first instar larvae of *Amphibolus, Castolus,* and *Notocyrtus* have multiple trichobothria. What does appear to be regular is that if the numbers of trichobothria change during ontogeny, they always increase—an observation concordant with the generally observed terminal addition of traits during ontogeny. These observations concerning variation in ontogenetic data are similar to those of Wenzel (1993) for the ontogeny of nest-building behaviors in the paper-wasp subfamily Polistinae (see Chapter 9).

In sum, ontogenetic data appear to represent an important source of characters for phylogenetic analysis. They may contain ambiguities, as do other forms of data. Ontogenetic data, where available, should be coded like any other. We conclude that such data do not offer a direct method of polarity determination, but they may nonetheless offer a more clear-cut indication of state ordering than other forms of data, a subject discussed in Chapter 3.

Choice and Formulation of Outgroups

The efficacy of outgroup comparison is related to the attributes of the taxa chosen to serve as outgroups. Outgroup choice for most morphological studies has been predicated on relationships established in prior higher-level studies, as noted above.

The outgroup need not be limited to a single taxon, and, indeed, analyses are probably best conducted using multiple outgroups, as noted above. Multiple taxa serving as outgroups need not form a monophyletic group (Nixon and Carpenter, 1993). Some analyses have used a single representative species as the outgroup; others have used a composite taxon that combines characteristics found across a range of species. The use of actual species makes character coding more straightforward than is often the case with a composite hypothetical outgroup. In the latter case, character codings—of necessity—will be "deduced" in the outgroup rather than observed, running the risk of unwitting subjective polarity interpretations that may bias results.

A distant or otherwise poorly chosen outgroup for rooting analyses of DNA sequence data will possess few character states in common with the ingroup taxa and therefore serve its intended function poorly. W. C. Wheeler (1990) showed that an essentially random sequence of nucleotides will usually root a phylogeny on the longest branch or internode; he concluded that such an outcome is unreliable or even meaningless. A rule of thumb might be that if an outgroup could not root a tree effectively on the basis of morphology, there should be no reason to believe that the same taxon would be any more effective in the rooting of a tree based on sequence data.

Ancestors, Sister Groups, and Age of Origin

The taxa, including fossils, in Hennig's phylogenetic schemes (and all subsequent cladistic work) were always placed as terminals at the ends of branches, whereas many preceding phylogenetic schemes embedded taxa, particularly fossils, along the branches of the tree (see Fig. 4.8). You might ask: What are ancestors in the sense of Hennig's definition of monophyletic? Can we actually find them in nature? Are they represented by fossils? And, if they cannot be found in nature, does this not discredit the entire system?

Cladistic methods treat ancestors as *hypothetical* (sometimes called *hypothetical taxonomic units,* or HTUs), which have an optimized "ground plan" of attributes. The internal nodes of a cladogram represent the hypothetical ground-plan condition for that clade, based on the distribution of observed character states in the terminal taxa. Ancestors, like all unobservable entities, are inferences based on the results of systematics; they are not something that can be recognized directly. For example, there are six or seven specimens of *Archaeopteryx lithographica,* which exhibit impressions of feathers (a synapomorphy for Aves) and a variety of plesiomorphic dinosaurian features, such as forelimb digits, teeth, and a long bony tail. These specimens are pieces of limestone. We know nothing of their status as breeding members of a population of proto-birds other than what can be inferred from their static morphology. Nor do we know whether they represent part of the direct ancestral lineage that led to modern birds or merely an offshoot side branch that went extinct. What we can observe, when we interpret them as exemplars of an extinct taxon, is that they exhibit the combination of character states that places the species at the base of the clade of modern birds and adjacent to a paraphyletic assemblage of small cursorial dinosaurs.

Because of these empirical limitations, the cladistic approach treats fossil taxa simply as observable terminals, like all other taxa in phylogenetic analysis (see, e.g., Hennig, 1969). This view of fossil taxa stands in stark contrast to the "paleontological approach," where a fossil would de facto be ancestral to other recognized taxa, either those in geologic strata of lesser age or of Recent forms.

References to fossil taxa as ancestors in the literature are usually not in the context of an explicit scheme of relationships derived from cladistic analysis.

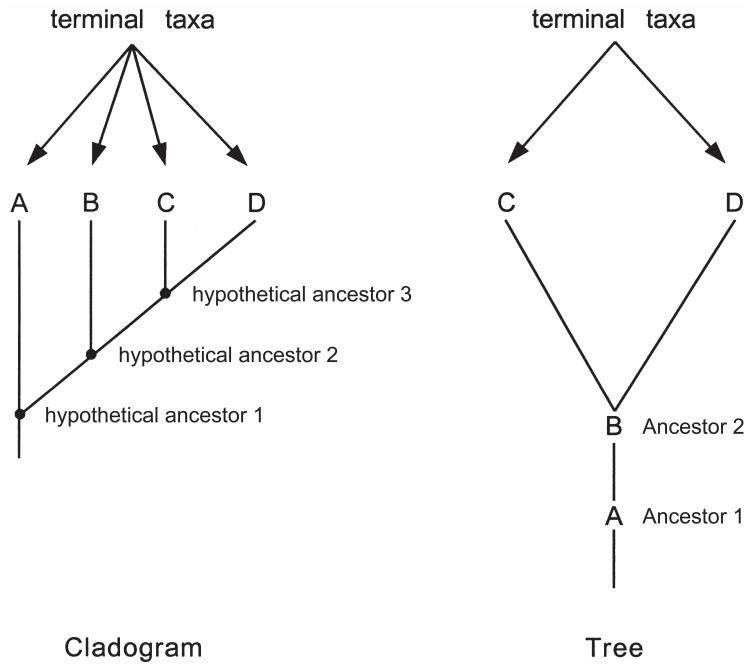

Fig. 4.8. Comparison of cladograms and trees in the sense of Nelson, showing the nature of ancestors in the two types of diagrams. Ancestors in cladograms are hypothetical, represented by the nodes that connect groupings of terminal taxa. The characters attributed to those nodes are optimized—as described in Chapter 5—from the characters of the terminals. These deduced attributes form the "ground plan" for the hypothetical ancestor, or HTU. Ancestors in the tree on the right are taxa represented by actual specimens, usually fossils.

Whether some fossilized organism actually represents an ancestor is a question that resides in the realm of the unknowable. The conventions of cladistics demand that all groups be monophyletic. Thus, if one taxon arises from another, the "ancestral" taxon is, by definition, paraphyletic (see also Chapter 7, Stem Groups and Crown Groups). From the point of view of character distributions, ancestor-descendant relationships are untestable in a cladistic framework because, as pointed out by Engelmann and Wiley (1977), corroboration of such hypotheses would be based on plesiomorphy. Ancestors would be of necessity taxa recognized by the absence of the distinctive attributes of their descendants. Therefore, virtually any grouping of putative ancestors and descendants would be possible.

Nelson applied the term *cladogram* only to diagrams depicting hierarchical patterns of relationship among nested sets of sister taxa (sometimes referred to as Steiner trees [Foulds et al., 1979]), whereas he restricted the term "tree" to diagrams illustrating ancestor-descendent relationships (Fig. 4.8). In the present work, the term *tree* is sometimes used interchangeably with cladogram, in conformity with much of the literature. This usage is not meant to suggest, however, that

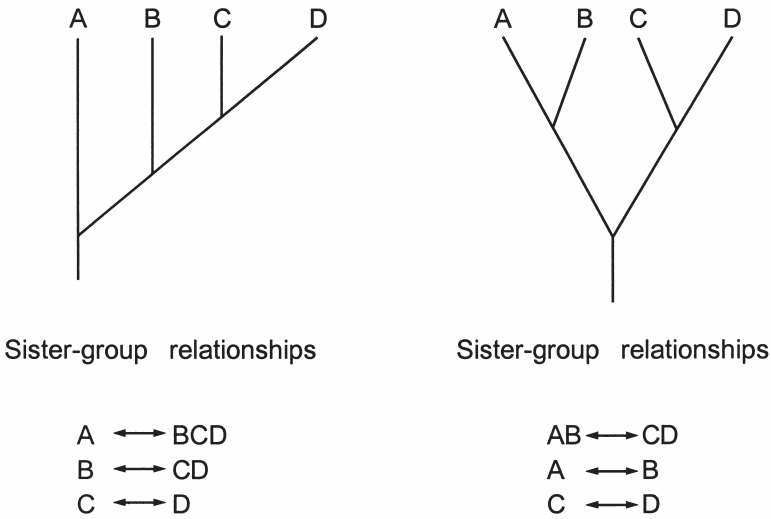

Fig. 4.9. Sister-group relationships identified for four taxa on two cladograms with different topologies. Sister groups are deemed to be of equal age because they share their most recent common ancestor.

such "trees" are thought to transmit information on ancestor-descendant relationships. Another type of *dendrogram* that is sometimes encountered, particularly in intraspecific "phylogeographic" studies, is the *minimum spanning tree.* Usually represented as an unrooted network, minimum spanning trees are often used to illustrate narrative scenarios of ancestral and derived patterns of variation in mitochondrial haplotypes or other molecular markers (e.g., Templeton, 2004). It appears that the interpretation of character polarity in these networks is fallaciously based on the discredited "common = primitive" assumption rejected in Sidebar 7 (see Brower [1999] and Posada and Crandall [2001] for alternative interpretations of minimum spanning networks).

Hennig referred to two (or more) groups arising from a common branch point in a cladogram as *sister groups* (Fig. 4.9). Because sister groups share the same hypothetical common ancestor, they are—by logical necessity—of the same age. Phylogenetic hypotheses in the form of cladograms, then, offer us information on the relative age of origin of taxa. When fossil taxa are among those being analyzed, there may be reason to assume a minimum age of origin for a clade on the basis of the estimated age of the fossil. Cladistic methods do not, however, provide information on absolute age of origin, nor do they allow for the identification of taxa as ancestors. Neither do cladograms (or any other type of tree other than speculative and unfalsifiable narrative scenarios) represent *direct* depictions of the history of speciation. Their limitations in this regard are both practical and methodological.

The practical limitation is that our sample of taxa will always be incomplete. We have no way of knowing how many species have gone extinct and will never be

sampled, or how many species from the Recent fauna have not yet been sampled. Therefore, although a cladogram based on character information may represent the relative recency of common ancestry implied by the evidence at hand, it will in most cases certainly not represent the complete history of speciation events.

The methodological limitation of cladistics—and therefore of cladograms—is that we have no method for recognizing ancestors, as was discussed in the foregoing paragraphs. Thus, even though one species may be descended from another, as in the case of Recent from fossil, our methods do not allow us to make such determinations. We are not aware of any other method that is capable of acquiring this knowledge.

These limitations have not deterred some biologists from the view that cladistic methods (or other less rigorous approaches to the study of relationships among taxa) can produce accurate reconstructions of evolutionary history, reveal ancestor-descendant relationships, or depict actual events of speciation. No doubt, any and all scientists would love to have such information. But, as discussed in Chapter 2, no matter the strength of such realist desires, answers to those questions remain in the realm of science fiction.

Suggested Readings

de Pinna, M. C. C. 1991. Concepts and tests of homology in the cladistic paradigm. *Cladistics* 7:367–394. [A useful review of homology concepts]

Maddison, W. P., M. J. Donoghue, and D. R. Maddison. 1984. Outgroup analysis and parsimony. *Systematic Zoology* 33:83–103. [A helpful discussion of outgroups and optimization]

Nixon, K. C., and J. M. Carpenter. 1993. On outgroups. *Cladistics* 9:413–426. [An authoritative and pithy review of outgroup comparison]

Patterson, C. 1982. Morphological characters and homology. pp. 21–74. *In:* Joysey, K. A., and A. E. Friday (eds.), *Problems in Phylogenetic Reconstruction.* Academic Press, London. [Within the modern literature, a classic paper on homology concepts]

Rieppel, O. C. 1988. *Fundamentals of Comparative Biology.* Birkhäuser, Basel. 202 pp. [An excellent discussion of the philosophical underpinnings of homology concepts]

Weston, P. H. 1994. Methods for rooting cladistic trees. pp. 125–155. *In:* Scotland, R. W., D. J. Siebert, and D. M. Williams (eds.), *Models in Phylogeny Reconstruction.* Clarendon Press, Oxford. [A useful discussion of outgroup comparison]

5

Tree-Building Algorithms

Although systematists have long associated characters with taxa, the relationship between character data and "phylogeny" has not always been obvious. The writings of Willi Hennig clarified this relationship. The formalization of these concepts in a quantitative method, via the parsimony criterion, has allowed for computer implementation of phylogenetic inference and the feasible solution of heretofore intractable problems. It is this capability that has taken the study of taxonomic relationships from an almost purely qualitative and speculative enterprise to one dominated by the use of computer software and "objective" methodologies. In this chapter we will examine "quantitative cladistics" in detail, including the issues of fit, parsimony algorithms, and character weighting. We also discuss the use of maximum-likelihood and Bayesian techniques as alternative approaches to the application of parsimony.

Background

Phylogenetic analysis, as proposed and practiced by Hennig, involved a restricted number of taxa and a limited amount of homoplasy in any given data set. Analyzed by hand, these matrices needed to express clear patterns in order to be interpretable, and systematists chose those characters—often representing uniquely derived features—that seemed to support natural groups. In other words, the characters selected often straightforwardly identified a unique scheme of relationships. For this reason, Hennig's method was at times misapprehended as implying clique analysis, an approach in which groups are formed only on the basis of characters that are all perfectly congruent (see Sidebar 9 in Chapter 6). The practical drawback of the strict Hennigian approach is that simple calculation often does not discover the multiple phylogenetic solutions that exist for a data set containing incongruent characters, and it may not even find the most parsimonious tree. The power of the computer offers the only possibility for solving problems in phylogenetic analysis other than those represented by small, highly consistent data sets.

Optimization

Optimization is the fitting of characters to cladograms on the basis of some criterion that is minimized or maximized. This concept is central to implementation of a quantitative cladistic approach and also to maximum likelihood methods. In cladistic analysis, the optimality criterion is the minimization of the number of character-state changes—ad hoc hypotheses—on a cladogram. As such, cladistic optimization is a straightforward application of the principle of parsimony to the selection of a particular hypothesis of phylogenetic relationships. Choice or rejection of alternate topologies is determined by the fit of the data to the hypothesis; that is, by the number of character-state transformations (or "steps") required on alternative cladograms. "Required" means that for a given hypothesis, the distribution of states exhibited by the terminals cannot be accounted for with fewer than X steps. Nonetheless, no limit is placed on the number of "extra steps" that could have occurred in the actual course of evolution because cladistic hypotheses are based on the parsimonious accounting of the observed evidence (Farris, 1983)—an epistemological rather than an ontological application of the parsimony criterion.

The optimal cladogram is the "shortest tree"—the one among alternatives that requires the smallest number of character-state transformations—or, if the transformations are differentially weighted, the tree that has the smallest cumulative "weight" or "cost" of implied changes (see below). The minimal number of character-state transformations can be determined by exhaustively enumerating all possible topologies or estimated by extensive sampling. The tree length will depend on (1) the data, (2) the "costs" assigned to different character-state transformations, and (3) cladogram topology.

On this view, character-state identities are explained by a cladogram when the cladogram allows attribution of those similarities to common ancestry or, stated more generally, to a common transformation event (Brady, 1994). Fit of the data determines exclusively which cladogram(s) among all possible cladograms is to be preferred; fit can be measured only through optimization.

Computer algorithms capable of employing various optimality criteria are widely available, and one of the chief controversies in modern systematic theory is over choice of the most appropriate optimality criterion for inferring natural classifications.

Optimality Criteria

Parsimony was apparently first used as an optimality criterion in phylogenetic analysis by Edwards and Cavalli-Sforza (1964) and Camin and Sokal (1965). Several variant approaches have been proposed as representing more "realistic theories" of character evolution that place asymmetrical restrictions on the possibilities for character-state transformation. The Camin-Sokal theory of character evolution employed the parsimony criterion while treating character-state transformations

as irreversible: Once a feature is modified, it can never revert to a more ancestral condition. The Dollo theory, as described by Farris (1977), treated all apomorphic states as uniquely derived, with homoplasy being accounted for only by reversal (effectively the opposite of the Camin-Sokal scheme, in which all homoplasy is produced by independent gains). Neither theory has received widespread acceptance or application.

Subsequently, the term parsimony has been used almost exclusively in reference to approaches that minimize the number of state changes on a cladogram for characters with symmetric transformation costs. There are several algorithmic variants that have been referred to by some authors (e.g., Swofford et al., 1996: 416) as "a group of related methods," but these merely represent alternative weighting schemes for character-state transformation within the same optimality framework. We describe the most common ones here.

Additive (Farris) optimization (transformation). Kluge and Farris (1969) and Farris (1970), employed the so-called Wagner ground-plan method of analysis, the name deriving from the American botanist W. H. Wagner, who first described the general approach. Under this criterion, character-state changes of multistate characters are *additive* (ordered, see Chapter 3), but reversal and multiple origination are not restricted. *Additivity assigns additional steps (costs) if changes on the cladogram do not adhere to the state-to-state order of multistate characters as defined in the data matrix* (Fig. 5.1). Thus, in Fig. 5.1, the optimization for additive characters can be accomplished with the algorithms published by Farris (1970), Swofford and Maddison (1987), and Goloboff (1993). The general procedure is widely known as "Farris optimization." It is most often employed for morphological characters where there is an evident transformation series established by criteria such as developmental patterns.

Nonadditive (Fitch) optimization (transformation). Fitch (1971) proposed the use of nonadditive (unordered, see Chapter 3) transformations for the analysis of amino acid and DNA sequence data. *Nonadditivity allows any state-to-state transformation—such as nucleotide for nucleotide, amino acid for amino acid—without the imposition of additional steps (costs)* (Fig. 5.2). Optimization under this "theory" of character evolution can be performed with algorithms of the type published by Fitch (1971). The method is frequently referred to as "Fitch optimization" and is now widely used for both molecular data and morphological characters for which the systematist does not wish to assign a specific a priori transformation series.

The term "Farris optimization" has also been associated with "accelerated transformation" (ACCTRAN) of characters on a cladogram (examples in Agnarsson and Miller, 2008). Optimization, in this sense, refers to alternative approaches to arraying character-state changes on a most parsimonious tree, as opposed to finding the most parsimonious tree(s) for a given set of characters.

Alternative parsimony optimization algorithms. If one wishes to impose transformation costs different from those imposed by either the "additive" and "nonadditive" approaches, Farris or Fitch optimization cannot be used to find the optimal

Character	1	2	3	4	5	6	7
TAXON X	0	0	0	0	0	0	0
TAXON A	1	1	0	0	0	1	1
TAXON B	1	1	0	0	0	2	2
TAXON C	0	0	1	1	0	3	3
TAXON D	0	0	1	1	1	4	3
TAXON E	0	0	1	1	1	5	3

2 trees: length 15 steps, CI = 86 RI = 85

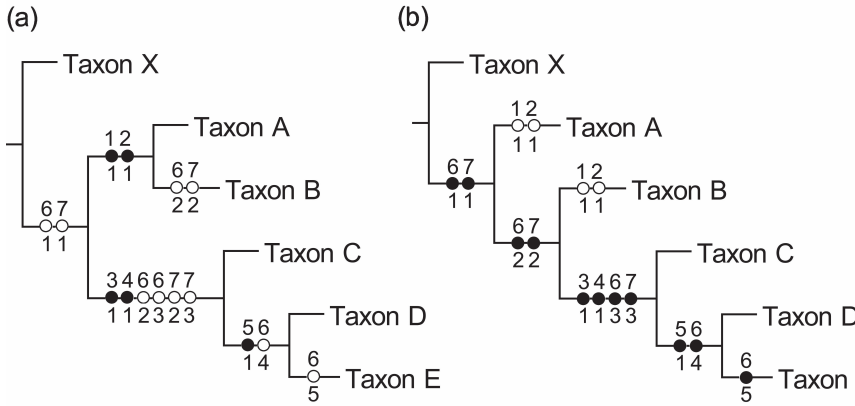

Character 6: 6 steps, ci = 83 ri = 75 5 steps, ci = 1.00 ri = 1.00

Character 7: 4 steps, ci = 75 ri = 66 3 steps, ci = 1.00 ri = 1.00

Fig. 5.1. Additive (Farris) optimization (transformation) of multistate characters produces two most parsimonious cladograms with a length of 15 steps for the matrix of data shown in the figure. Cladogram (a) shows the slow (DELTRAN) optimization of character 6, a 5-step character, with a total of 6 steps, and character 7, a 3-step character, with a total of 4 steps. Notice that because the character coding is not concordant with the most parsimonious tree for the data (the open squares indicating homoplasy), additive coding has added one extra step for each character, but nonetheless each contains substantial synapomorphy content. Cladogram (b) shows the slow (DELTRAN) optimization of both characters 6 and 7 with the minimum number of steps, the homoplasy in the data occurring in the two-state characters 1 and 2.

Character	1	2	3	4	5	6	7
TAXON X	0	0	0	0	0	0	0
TAXON A	1	1	0	0	0	1	1
TAXON B	1	1	0	0	0	2	2
TAXON C	0	0	1	1	0	3	3
TAXON D	0	0	1	1	1	4	3
TAXON E	0	0	1	1	1	5	3

1 tree: length 13 steps, CI = 100 RI = 100

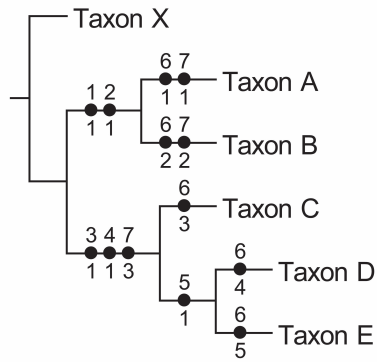

Character 6: 5 steps, ci = 100 ri = 0.00

Character 7: 3 steps, ci = 100 ri = 100

Fig. 5.2. Nonadditive (Fitch) optimization (transformation) of multistate characters produces a single most parsimonious cladogram with a length of 13 steps, using the same data as in Fig. 5.1, with characters 6 and 7 fitting the cladogram perfectly (the closed circles indicating the absences of homoplasy). All states for character 6 are autapomorphic and uninformative with regard to groupings; therefore, the retention index is 0.00. Under slow optimization (DELTRAN), state 3 of character 7 is synapomophic for taxa C, D, and E, whereas states 1 and 2 are autapomorphic. Comparing the results of nonadditive optimization with additive optimization (Fig. 5.1), it can be seen that the nonadditive tree is shorter, but that information on grouping as implied by the multistate characters is lost in favor of treating states as unique to terminal taxa.

state assignments. In such cases, it is necessary to use algorithms such as those first developed by Sankoff and coauthors (Sankoff and Rousseau, 1975; Sankoff and Cedergren, 1983). These algorithms (dubbed "generalized parsimony" or "step-matrix" by Swofford et al., 1996) consist of enumerating all possible combinations of state assignments for every node in the tree and its surrounding nodes,

calculating partial costs in every case, and choosing the best result. It is, in some sense, a "brute force" approach. Using these algorithms, any set of symmetrical or asymmetrical "costs" can be assigned a priori to the different transformations. This approach readily allows for implementation of any "model" of nucleotide substitution, for example, something not possible under nonadditive (Fitch) optimization. Maximum likelihood and Bayesian techniques usually employ differential transformation cost matrices as well, approaches that are discussed in more detail below.

Optimization of characters, then, is not the application of different methods, but rather represents a choice among different rationales for assigning transformation costs between states. Ideally, such a choice should be made on the basis of evidence, as under the arguments presented by Lipscomb (1992) for treating characters as additive when evidence for transformation exists in the form of observed similarity. Once the choice is made, the algorithms developed by Camin-Sokal, Farris, Fitch, and Sankoff are the tools used to find the most parsimonious tree(s) given those transformation costs.

The various parsimony-based optimality criteria can be summarized as follows:

Additive (ordered; Farris)	Change costs increase with alteration of state-to-state order.
Nonadditive (unordered; Fitch)	Change costs are equal for any possible state-to-state change.
Camin-Sokal	Reversals are of infinitely high cost.
Dollo	Multiple origins of same character are of infinitely high cost.
Sankoff	Costs for any state-to-state change are assignable on a differential basis

Sidebar 8
Why Distance-Based Methods Fail

As we have stated many times, the optimal cladogram is the one that requires the smallest number of implied character-state transformations. Phenetic methods, as discussed in Chapter 1, group taxa by degree of overall similarity, as measured by patterns of shared character-state identity.

From a mathematical perspective, the difference between taxa measured on a phenogram is the *Euclidean distance,* while difference between taxa on a cladogram is measured by the *path length.* We will use a simple example to illustrate the distinction between these.

	1	2
A	1	1
B	2	2

Examining the above matrix, it is clear that taxa A and B differ by a path length of two steps (one step in Character 1, one step in Character 2). If we think of the data matrix as an N-dimensional space with each character as an axis and the states of the characters as points along the vector of that axis, then taxon A sits at the point (1,1) and taxon B is at (2,2). The path length can be mapped by counting the distance moved along the axes of the characters that differ between the taxa. This measure is also referred to as the *Manhattan distance* because, like walking on city blocks, the shortest path from point A to point B requires traveling on the ordinal axes (the streets), rather than taking the diagonal line that would cut through the middle of the city block. *Euclidean distance,* by contrast, is the straight line between points in N-dimensional space. Thus, the Euclidean distance between A and B is the hypotenuse of the right triangle (the square root of the sum of the squares of the individual vectors; 1.44 units, in this simple case). At first glance it would seem that Euclidean distances are a shorter summary of the character information than the path length (Manhattan) distances.

However, trouble arises because algorithms that build trees from distances require that the branch lengths from the root to each terminal taxon be the same, a property called *ultrametricity* (Farris, 1981). If this is not the case, then taxa that exhibit relatively few character-state transformations will be grouped together on the basis of a lack of change—by symplesiomorphies. Although cladograms are not usually drawn to represent differential branch lengths, the method is perfectly capable of accurately representing patterns of character-state transformation, whether there are many or few transformations on a given branch. Indeed, those character-state transformations are portrayed on many published cladograms, especially those based on the analysis of morphological data.

Metricity and the Triangle Inequality

The use of computer algorithms requires a mathematical model on which tree construction can be based. The models used are *metrics,* which fit the triangle inequality.

The metric used in the cladistic analysis of discrete character data is the Manhattan, or *path-length distance.* Where, d equals the distance between two taxa, and i, j, and k are taxa, thus:

$$d(i,j) \leq d(i,k) + d(j,k)$$

As illustrated with this cladogram, the distances between taxa i and k and between taxa j and k may be different, but their sum must be greater than the distance between taxa i and j.

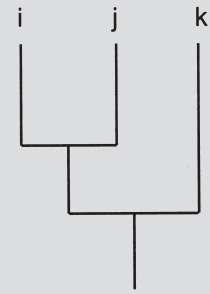

Phenetic approaches, on the other hand, have employed *ultrametrics,* which are clustering-level distances, and measure Euclidean distances. Under this model:

$$d(i,j) \leq max\ d(i,k),d(j,k)$$

As an ultrametric, the distances between taxa *i* and *k* and between taxa *j* and *k* must be equal and both must be greater than the distance *i* and *j.* The important difference between the path-length distance and the Euclidean distance is that the former allows for variable rate of change whereas the latter implies uniform rate of change. Indeed, it is claimed in many phenetic writings that classifications must be ultrametric because this is the only way that information on "levels" in the classification can be correctly stored (Farris, 1982; see also discussion in Carpenter, 1990).

If we name the "internal nodes" in the phenogram as *a* and *b:*

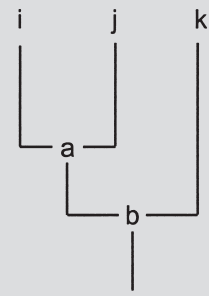

it is easy to see that the requirement that the distance between taxa *i* and *k* equal the distance between taxa *j* and *k* can be fulfilled only if the amount of evolution from a to *i* is the same as that from a to *j*. Adding taxa *l, m, n,* etc. outside the group of three would require that the amount of evolution from *b* to *k* be the same as that from *b* to *i* and from *b* to *j*. When some of the

branches are "longer," the inequality cannot be satisfied for all triplets. This happens, obviously, when there are unequal rates of evolution.

Consider now a tree where branch lengths (not levels) indicate amount of difference (with numbers by the branches indicating branch lengths):

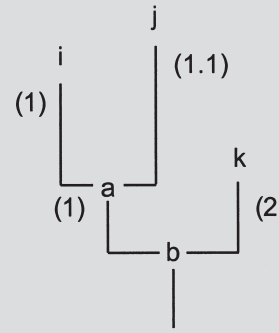

Note that the branch *aj* is slightly longer than *ai*. But then, all three instances of the ultrametric inequality are not satisfied:

$$dij \leq max\ (dik,dkj) \rightarrow 2.1 \leq \max\ (3, 3.1) \quad \text{TRUE}$$
$$dik \leq max\ (dij,dkj) \rightarrow 4 \leq \max\ (2.1, 4) \quad \text{TRUE}$$
$$djk \leq max\ (dik,dij) \rightarrow 4.1 \leq \max\ (4, 2.1) \quad \text{NOT TRUE}$$

In such a case, where the observed distances (the actual amount of difference) between taxa are unequal, it will not be possible to produce a tree diagram with the observed distances perfectly retrievable from the distance levels. But path-length distances as used in cladistics will produce a perfect fit. In fact, as shown by Farris (1979), whenever the "levels" model produces perfect fit, so will the "path-length" model. Additional discussion of the application of the triangle inequality can be found in Wheeler (1993).

Storing Trees

While the typical means to visualize patterns of hierarchical relationship among a group of taxa is a branching diagram, these patterns can be equally well represented as nested sets in a Venn diagram (an approach used early on by, e.g., Milne-Edwards, 1844), which can be represented in text in what is known as *parenthetical notation.* This approach, which is how computers store tree topologies, uses nested sets of parentheses to indicate the inclusive nature of groupings. Examples are shown in Fig. 5.3. Note that the number of left- and right-hand

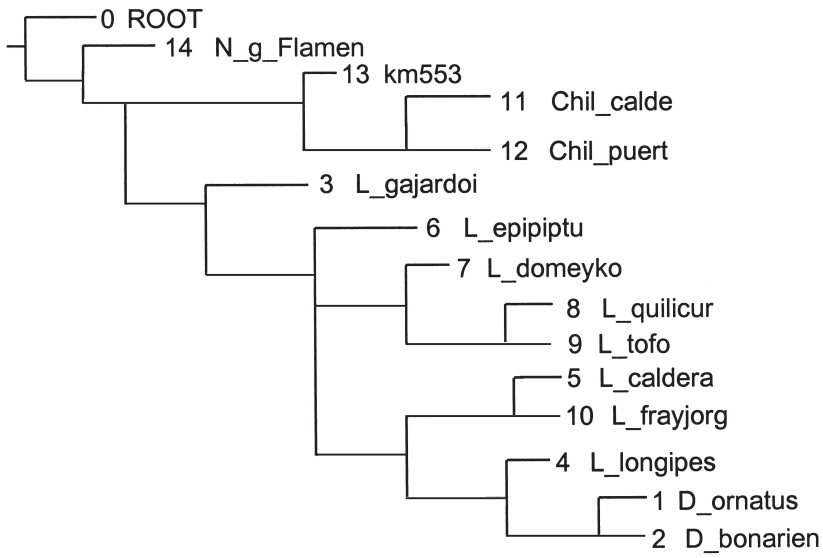

(0 (14 (13 (11 12)) (3 (6 (((4 (1 2)) (5 10)) (7 (8 9)))))))

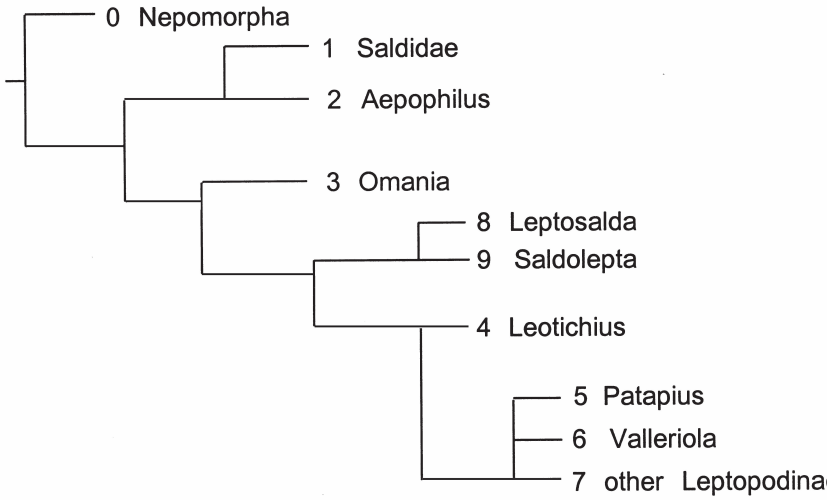

(0 (1 2) (3 ((8 9) (4 (5 6 7)))))

Fig. 5.3. Examples of parenthetical notation and corresponding cladograms.

parentheses is "balanced" in the examples. Computer phylogenetics programs always produce notation that is balanced, although they may be able to accurately interpret trees for which not all groupings have balanced parentheses.

Finding Optimal Trees

Exact parsimonious solutions for small data sets can be discovered by enumeration of all possible trees. Because the number of trees increases as a geometric function of the number of taxa, however, it is not possible to calculate exact solutions for larger data sets. There is no known mathematical solution for such problems (see Day et al., 1986), and no matter how much computing power is available, there are more possible trees than can ever be examined (Fig. 5.4).

Most currently used phylogenetic algorithms adhere closely in principle to the Wagner method originally proposed by Kluge and Farris (1969) and Farris (1970) for calculating trees. To improve the success rate for finding optimal solutions, many variant implementations of Farris's original approach have subsequently been developed, increasing immensely the speed and effectiveness with which optimal trees can be sought.

The Wagner method of Farris produces—as do most other methods—"unrooted trees," often referred to as *networks.* Because the parsimony criterion does not require a priori considerations of polarity or synapomorphy, it is not necessary to root the scheme of interrelationships in order to optimize the character states for all internal nodes on the tree. Thus, localizing the hypothesized positions of character-state transformations on the internal branches of the tree under a given optimality criterion is the core problem of numerical cladistics. The states for the terminal taxa are already known!

A Wagner tree (network) is formed by the sequential addition of taxa. Because different addition points produce trees of different lengths, taxa are added in those positions that increase the length of the tree as little as possible. Using this approach, the method attempts to end up with trees of minimum global length. In practice, it is nearly impossible to find the tree(s) of minimum length using the simple Wagner algorithm. Wagner trees, however, are generally *much* shorter than arbitrary trees (those generated at random, for example) and thus constitute a better starting point for further refinement through the use of branch swapping (see below).

As the taxa are added to the growing network, the length produced by adding a taxon at each position can be calculated. The length calculation is the time-consuming aspect of phylogenetic computation; current computer programs use fast indirect methods to calculate length.

Note that different addition sequences of the taxa may lead to different trees. Consider the data matrix in Fig. 5.5, where taxon X represents the outgroup. Forming a tree with a simple Wagner algorithm, which adds the taxa in the order in which they appear in the matrix produces an incorrect tree (Fig. 5.5a). That is

1	1
2	1
3	3
4	15
5	105
6	945
7	10,395
8	135,135
9	2,027,025
10	34,459,425
11	654,729,075
12	13,749,310,575
13	316,234,143,225
14	7,905,853,580,625
15	213,458,046,676,875
16	6,190,283,353,629,375
17	191,898,783,962,510,625
18	6,332,659,870,762,850,625
19	221,643,095,476,699,771,875
20	8,200,794,532,637,891,559,375
21	319,830,986,772,877,770,815,625
22	13,113,070,457,687,988,603,440,625

Fig. 5.4. The numbers of possible bifurcating rooted trees for 1–22 taxa (from Felsenstein, 1978).

because the first 3 characters determine a unique tree (X ((A B) (C D))), whereas the last 2 characters are homoplastic. However, if only X, A, and B have been placed in the tree, when C is to be added the characters that join C and D will appear as uninformative (i.e., autapomorphic, requiring the same number of steps for any possible placement of C), since D is still not placed in the tree. If the taxa are instead added as (XAC), D, B the shortest tree is always obtained (Fig. 5.5b). In other words, the evidence that the Wagner method considers at each step is partial; thus, a taxon position optimal for all of the evidence might not appear as optimal for only part of it (Goloboff, 1998).

Phylogenetic Algorithms

There are now scores of phylogenetic algorithms available for finding trees under the optimality criteria discussed above. The existence of variant approaches to solving essentially the same problem derives not from a plethora of optimality criteria but rather from the fact that finding exact solutions is unfeasible for all but relatively small-sized data sets (i.e., no more than 15–20 taxa). Finding

Character	1	2	3	4	5
TAXONX	0	0	0	0	0
TAXONA	1	0	0	0	0
TAXONB	1	0	0	1	1
TAXONC	0	1	1	1	1
TAXOND	0	1	1	0	0

(a) Simple Wagner algorithm = 8 steps

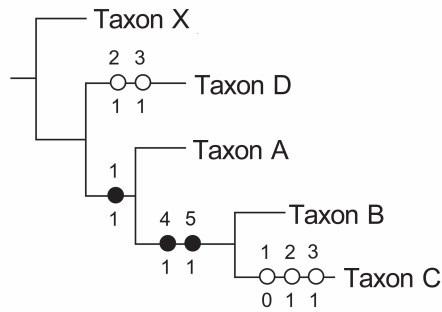

(b) Randomized addition sequence = 7 steps

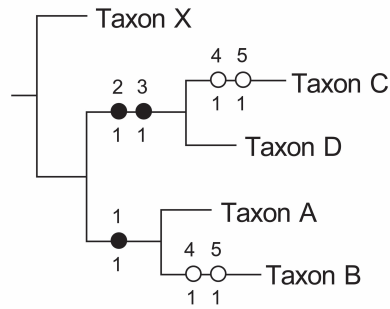

Fig. 5.5. Matrix of 5 characters and 5 taxa, taxon X being the outgroup, indicating how using a simple Wagner algorithm may fail to find a correct solution (a) (fast optimization), whereas randomizing the taxon addition sequence (b), achieves the correct solution.

the best trees for large data sets, particularly those with substantial homoplasy, is *very* difficult. Thus, as you might expect, there are many ways to implement solutions.

The following descriptions of algorithmic approaches to solving phylogenetic problems are general. More elaborate sources are available (e.g., Goloboff, 1994, 1996; Swofford et al., 1996; Felsenstein, 2004) for those who are interested.

Algorithms can be divided into two classes on the basis of the solutions they produce: *exact* versus *heuristic* (approximate).

Exact-solution algorithms are of two types. First, *exhaustive search* algorithms examine every possible cladogram for a given set of taxa; the maximum number of allowable taxa in the data set will probably be 12, as a consequence. Second, *branch-and-bound* (implicit enumeration) algorithms perform exhaustive searches within limits (bounds) established during the process of searching for minimum length cladograms, rather than examining all possible cladograms.

A brief explanation may be helpful for understanding how the branch-and-bound approach works. Generating all possible trees would require that the first 3 taxa be joined, then a fourth taxon be added in the 3 available positions, then a fifth be added in the 5 available positions, and so on. The length of the tree would be calculated for all possible topologies as each new taxon is added to the ever-growing tree. Because the length of a tree can never decrease as more taxa are added, if the length of any partial tree exceeds that of the best complete tree(s) found so far (say 4 taxa produced a tree longer than 5), it is unnecessary to continue with the addition of more taxa on the topology represented by that longer partial tree. This approach allows for the rejection of many trees by examining/evaluating only a few partial trees. For example, if the lengths for two positions for the fourth taxon exceed the length for the third possible position, this will allow for the rejection of all the cladograms derivable from those two topologies: two-thirds of all possible topologies can be rejected just by optimizing the subtrees formed by the three possible addition points for the fourth taxon. In this way, the method can enormously reduce the number of cladograms that need to be examined/evaluated, thereby increasing the number of taxa to at least 18 for which a guaranteed optimal solution can be found (see also discussion in Swofford et al., 1996).

Beyond 18 or so taxa we must rely on *heuristic (approximate solution) algorithms.* The simplest among these is the *Wagner algorithm,* which creates trees de novo, by successively adding taxa to a growing network. In its most basic implementations, the Wagner algorithm is very fast, but does not produce most parsimonious trees for data that are not highly congruent, as illustrated in the example in Fig. 5.5. The results can often be improved without greatly increasing the time needed to perform the calculations through the use of random taxon-addition sequences. Trees produced by the Wagner algorithm may be used as "starting trees" for branch swapping.

Traditionally, improvements on the trees produced by the Wagner algorithm were found through the use branch swapping. *Branch swapping* is a process in

which branches on a tree are moved in an attempt to find more promising topologies—that is, shorter trees. Two approaches are commonly applied: *subtree pruning-regrafting* and *tree bisection-reconnection.* The latter approach examines more trees, and therefore takes longer, but it is also likely to produce better results. The efficiency and effectiveness with which branch swapping finds shorter trees will depend on how close the input tree is to minimum length, the effectiveness of the branch-swapping algorithm itself, the amount of homoplasy in the data, other aspects of data structure, and—of course—the speed of the computer. Detailed discussions of algorithmic approaches can be found in Goloboff (1996), Swofford et al. (1996), and Gladstein (1997).

Because branch swapping does not produce an exact result, one might wish to have a method for determining when a search has found an optimal tree. This can be done as follows: If the swapper performs 20 replications (distinctive taxon addition sequences), and all of them find the same tree(s), then one can be reasonably certain that the shortest tree has been found. If, however, the swapper performs multiple replications, and one or a few replications find a shortest tree(s) while most of the others find trees of different (greater) lengths and topologies, then additional replications may be advisable to further explore "tree space."

Even branch swapping, as described above, has limitations. Nixon (1999) and Goloboff (1999) have described additional algorithmic approaches to finding shortest trees. Among these are the parsimony ratchet, tree fusing, sectorial searches, and tree drifting. These approaches, separately or in combination, allow for the critical analysis of very large data sets in a limited time frame.

The *parsimony ratchet* reweights subsets of characters on trees discovered in simple heuristic searches and uses them as starting points for additional searches that may discover trees that are shorter when the original weights are restored (discussed further below, under Islands of Trees and Solutions for Very Large Data Sets).

Tree fusing employs an approach wherein subgroups of the same composition are exchanged between different trees.

Sectorial searches analyze separately different sectors of a given tree. Goloboff (1999) described it as a special form of rearrangment evaluation. As opposed to branch swapping, the approach is able to analyze these tree sectors more rapidly than would be the case with the movement of individual branches.

Tree drifting is an extension of branch swapping, but places limits on the suboptimal solutions that are accepted for further analysis. Under this approach, the speed with which improved solutions can be found is greatly increased.

According to Goloboff (1999) the tree fusing method can produce optimal trees only when very large numbers of suboptimal trees or a few nearly optimal trees are fed to it. Those trees can be found most readily through the use of sectorial searches and tree drifting. Thus, these algorithms, when employed in proper combination through the program TNT (Goloboff et al., 2008) bring a new level of efficiency to the analysis of very large data sets.

No matter what heuristic algorithmic approach is employed, certain strategies applied beforehand may help speed up the analysis. Recommended strategies include the following:

1. Make sure that there are no taxa with identical character-state distributions or taxa that differ from one another only by autapomorphies. These are viewed as identical by the computer and result in multiple equally parsimonious trees that are stored for swapping. Remove redundant taxa prior to analysis to reduce the number of possible topologies and make the search more efficient. These taxa may be replaced later on without affecting the inferred tree length.
2. Assess the data matrix for taxa with a lot of missing data. Such taxa may be optimized to join different sister taxa in alternative trees, again resulting in multiple equally parsimonious trees. A common source of difficulty is complementary missing data, such as taxon A with only morphology and taxon B with only DNA sequence in the data matrix. Removal of one or both of such taxa may improve resolution and speed of the analysis.

Most available phylogenetics program packages contain algorithms that produce comparable results. They may not produce them in comparable times, however, for the reasons noted above. Sources of phylogenetics packages are listed in the Appendix at the end of this volume.

Differential Character Weighting

In Chapter 4 and in the Optimization section above, we discussed differential costs of character-state transformations. It is important to make a distinction between transformation weights among the states of a single character and differential weights applied to different characters in a data matrix. Quantitative cladistic analysis lends itself to weighting, some optimality criteria involve weighting, and most computer phylogenetics programs make provision for weighting. Thus, it will be helpful to gain some perspective on this subject, which has caused much intense discussion and considerable confusion.

First, let us dispel the notion that it is possible to construct an "unweighted" character matrix. By virtue of selecting some characters and excluding others, the researcher is de facto giving many potential but rejected characters the weight of zero. Focus on character discovery among particular structures and their parts can also emphasize the importance or weight of those structures in the resultant cladogram. Some examples of alternate character sources that could be differentially sampled include cranial versus postcranial morphology in vertebrates, larval versus adult morphology in holometabolous insects, and even "molecules vs. morphology" in most organisms. Likewise, a character coded with n states will require at least $n - 1$ steps on the most parsimonious tree, so characters with more states have more "weight" in the analysis. Such weighting is an unavoidable consequence of

the formalization of attributes of a group of taxa into characters and states. What is usually meant by an "equal-weighted matrix" is one in which all character-state transformations have a cost of 1.

But some systematists choose to apply differential weights beyond these implicit forms of weighting. Traditionally, such explicit character weighting has been viewed as being of two types: *a priori,* the weights being applied without consideration of the fit of the characters to the most parsimonious tree, or *a posteriori,* the weights being related to the fit of the characters. These approaches might also be labeled *subjective* and *objective* weighting.

A Priori (Subjective) Weighting

Weighting criteria such as relative morphological complexity, functional importance, adaptive significance, and probability of state inheritance in DNA sequence data are inherently subjective. To understand why, we might consider the result of giving complexity higher weight than simplicity. In such a case, secondary loss might be weighted less because it represents a reduction in complexity. Nonetheless, loss characters can be excellent group-defining characters, as for example, the absence of limb elements in snakes or the loss of wings in fleas. Experience suggests not only that many apparently "simple" characters define groups perfectly but also that complexity is subject to varied conceptions depending on the observer.

An unvarnished approach to subjective character evaluation was expressed by Guttmann (1977:646):

> Only those features and characters whose functions are known, and for which the value of the adaptational changes can be assessed, can be utilized in phylogenetic construction. A phylogenetic theory can neither be constructed by comparison of morphological configurations nor by character analysis.

Functional systems provided the basis for Cuvier's system of embranchements (his 5 major groups of animal taxa) in the early nineteenth century (Appel, 1987), but exclusive reliance on such characters was rejected by Geoffroy, Darwin, and others in subsequent decades.

Such a priori views are not restricted to discussions of morphological characters. A clearly stated vision concerning the primacy of molecular data was expressed by Sorensen et al. (1995):

> [P]hylogenetic reconstruction using nucleotide sequencing is thought to be superior to, and definitely more objective than, that based upon morphology . . . This is because, in general, nucleotide substitutions are random, non-selective events, as opposed to trying to determine how to code and weight morphological characters, which are de facto a result of selection.

If nucleotide substitutions were truly random, we might expect the results of their analysis to be without hierarchic structure. Yet, hierarchic structure is exactly what Sorensen and all others performing phylogenetic analysis seek. Note, also, that if variation in sequence data were random, then one would probably not want to differentially weight those characters with respect to one another, even if one did choose to throw out the morphological data. However, DNA exhibits complex patterns of nonrandom variation, as one would expect of the molecule that encodes the developmental program for building all those adaptive morphological features. As is emphasized in the Separate versus Combined Analysis section of Chapter 6, there is strong empirical support for the view that congruence exists between morphological and sequence data. When data from these two sources are analyzed simultaneously, the ratio of phylogenetic signal (synapomorphy) to noise (homoplasy)—that is, the ability to recover hierarchy from the data—is improved. Thus, the statements of Sorensen et al. and others concerning the factual superiority of sequence data would seem to represent little more than opinion, and more particularly opinion that is not supported by the evidence.

The quotations from Guttmann and Sorensen above offer conflicting perspectives on systematic data, one suggesting that adaptive significance is of paramount importance, the other suggesting that valid character data must be nonadaptive. Such arguments invariably rely on a priori appeals to the value of characters. The "goodness" of characters as indicators of relationship cannot be judged a priori. Instead, it can be evaluated objectively only with respect to congruence among characters themselves. Otherwise, ad hoc hypotheses of adaptive significance and selective neutrality could be invoked ad infinitum. In our view, unless features are obviously homoplastic due to parallel evolution, adaptive convergence, or horizontal transfer, their particular adaptive or nonadaptive qualities are irrelevant to their potential value as systematic characters. Thus, weighting strategies that apply "objective" criteria are the only ones to which we will devote further attention here. We will discuss weighting of nucleotide data further in the Maximum Likelihood section below.

A Posteriori (Objective) Weighting

Three approaches discussed by Goloboff (1993) in his review of character weighting can be labeled as "objective."

Weighting based on character compatibility. Characters are compatible with one another if they do not imply support for conflicting topologies. The most obvious implementation of this weighting approach is "compatibility analysis" itself (see Sidebar 9 in Chapter 6), as first proposed by Le Quesne (1969; see also Sharkey, 1989). *Compatibility analysis* requires that all characters used to construct a phylogenetic scheme be perfectly consistent; that is, all must be in absolute agreement concerning the pattern of relationships they support. Such an approach could be described as an all-or-none weighting strategy. As the level of

homoplasy increases, the level of compatibility decreases, such that the method explains fewer and fewer of the original observations. Perhaps it is for this reason that as data sets have grown larger and more homoplastic, use of compatibility-based methods has declined. Goloboff has noted that because characters with fewer incompatibilities may nonetheless be more homoplastic, a compatibility-derived weighting scheme is not based on the degree of correlation between characters and trees, a violation of all parsimony-based optimality criteria.

Successive approximations weighting. Goloboff discussed two varieties of weighting based on character consistency, in which the more homoplastic characters are those that receive lower weights. Probably best known among this type of approach is *successive approximations weighting* (SAW), first proposed by Farris (1969) as a method of evaluating the strength of characters as they define a given tree. The method functions as follows:

1. Compute the most parsimonious tree(s) for a data set with equally weighted characters.
2. Weight the characters in the data set relative to their agreement with the cladogram(s) in question; for example, by the value of their consistency index (discussed further in Chapter 6).
3. Recompute the tree(s) based on the characters with their newly assigned weights.
4. Continue steps 2 and 3 iteratively until the weights become stable (do not change from one computational iteration to the next).

This approach assigns equal weights to the characters for purposes of computing the "input" (initial) tree(s). SAW then determines the values (weights) that *should* be assigned to the characters on the tree(s) that the equally weighted characters defined.

If multistate characters are included in a result subjected to SAW, they should be recoded in additive binary format. Under this approach, consistencies for all state changes are evaluated independently and the weighting function will therefore be applied on a comparable basis for all information on character transformation (Farris, 1969; Carpenter, 1988). It is not clear that it would be practical to recode DNA sequence data into additive binary format.

SAW was originally defended by Farris as being consistent with the logic of parsimony because the weights are assigned based on the consistency of the characters. The procedure does not, however, implement an *optimality criterion* by which the fit of data to a tree can be measured directly. SAW can be applied only to data on the basis of a cladogram produced by prior analysis with those data (see further discussion in Chapter 6).

As stated above, weighting based on character consistency assumes that all characters were given equal weights at the outset, in order to discover an initial set of consistency values. The validity of the assumption of prior equal weights can be scrutinized through the application of successive approximations weighting,

but the cladograms produced by that method are often not changed, only "filtered." The logic of the equal weights assumption has, however, been challenged by Goloboff (1993) on the grounds that all characters do not contribute equally in determining cladogram topology and therefore should not be given equal weights for the purpose of computing cladograms. For this reason, he proposed a second approach based on character consistency.

Implied weighting and fittest trees. Goloboff (1993) extended the logic of weighting on the basis of consistency to an approach that selects a preferred cladogram according to the "implied weights" of the characters as they are distributed on alternate topologies. Goloboff (1993:85) argued that this approach is superior to SAW by noting that the *fittest tree,* the one that is shortest under the weights it implies is *self-consistent,* resolving conflicts among characters in favor of those that have less homoplasy and therefore provide stronger phylogenetic signal. Conversely, a tree that is not shortest under the weights the characters imply is *self-contradictory,* because conflicts are resolved in favor of those characters the tree is telling us not to trust (i.e., the ones with the greatest amount of homoplasy).

The idea of self-consistency also applies to the results of SAW, where the iterative weighting procedure is repeated until a stable result is achieved. That result is self-consistent, with the weights of characters leading to a preference for the tree they imply. Although SAW has generally been applied in cases where a parsimony analysis produces multiple trees (see Chapter 6), as pointed out by Goloboff (1993), self-consistency of a single tree might just as reasonably be evaluated through the application of SAW. The starting point for trees subjected to SAW is based on calculations using characters given prior equal weights, whereas when searching for fittest trees under the implied weights procedure, weights are assigned during the tree-searching process. Whereas SAW will almost always reduce the total number of trees to be considered from the number produced by an equal weights parsimony analysis (see also Chapter 6), the implied weighting approach generally produces a limited number of trees as part of the analysis itself.

The weight of a character, then, can be directly related to the fit of that character to the tree, as measured—for example—by the consistency index. Under Goloboff's approach, the value to be maximized is *total fit,* the sum of the fits of all characters to a tree. To relate fit to homoplasy, Goloboff's implied weights approach requires the application of a weighting function to downweight homoplasious characters, as does SAW. If that function is linear, it treats the same step difference as equally important regardless of the amount of homoplasy (Fig. 5.6a), which would be the same as if all characters were given prior equal weights. This might be called the traditional approach under parsimony. If all characters were given higher prior weights, the slope of the line would become steeper, but the weighting function would not differ for characters with different amounts of homoplasy.

Goloboff argued that when calculating fittest trees, as Farris (1969) had for successive approximations weighting, a concave weighting function (Fig. 5.6b) appeared to be the most desirable because it gives the highest relative weight to

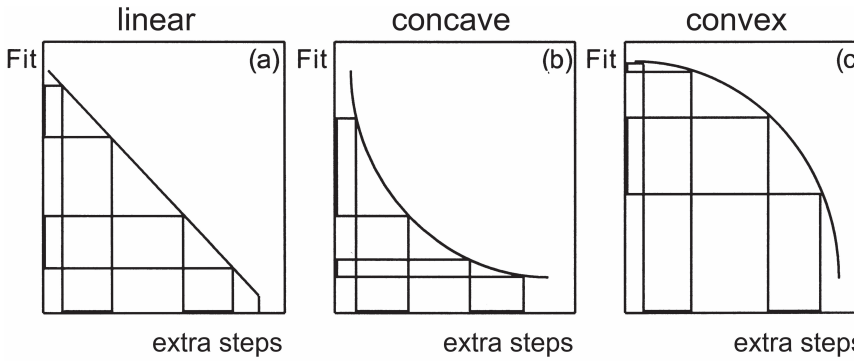

Fig. 5.6. Types of weighting functions. (a) Under a linear weighting function, the same step difference is equally important regardless of the amount of homoplasy (i.e., fit and homoplasy have a linear relationship; therefore the slope of the line changes with the weights of the characters but not with respect to homoplasy). (b) Under the concave weighting function, the value of a character decreases relatively rapidly as homoplasy increases from its minimum value and decreases slowly as homoplasy approaches its maximum value, as seen from the slope of the curve. (c) Under the convex weighting function, the value of a character decreases relatively slowly as homoplasy increases from its minimum value and increases rapidly as homoplasy approaches its maximum value, as seen from the slope of the curve (adapted from Goloboff, 1993).

characters with maximum group-defining value. Such a function gives distinctly and conspicuously lower weights to characters with limited group-forming value (i.e., those with the most homoplasy). Under this criterion, the addition of an extra step to an already highly homoplastic character changes the value of the character much less than adding an extra step to a character with no homoplasy at all.

The remaining possibility, a convex weighting function (Fig. 5.6c), produces what Goloboff referred to as the "absurd" possibility of weighting characters with more homoplasy more heavily than those that are perfectly consistent with the tree they define. The *consistency index* (see Chapter 6) is a concave function and therefore provides the initial basis for the weighting function. The concavity of this curve, and therefore strength of the function, may be greater than one wishes, however. Thus, a *constant of concavity* (k) can be added to change the severity of the concave weighting function. A value of 0 for the constant of concavity maintains the concavity of the consistency index, whereas higher values reduce the strength of the weighting function. The "fittest trees" method of Goloboff uses either Farris or Fitch optimization to calculate state assignments and measure the homoplasy for a given (single) character, exactly as for finding shortest trees. The fittest tree(s) may not be the shortest tree(s) because fit maximizes the sum of the average unit consistency index (ci), as shown in the following formula:

$$\sum \mathrm{ci} = \sum \left(\frac{m}{s} \right)$$

whereas the shortest tree maximizes the ensemble consistency index (CI):

$$\mathrm{CI} = \frac{\Sigma m}{\Sigma s}$$

In both formulas, *m* is the minimum number of steps for a character on the cladogram, and *s* is the actual number of steps for the character on the cladogram. Both Goloboff's method and successive approximations weighting often lead to discovery of a single tree, or a reduced set of trees, compared to an equal-weighted parsimony search. We will further discuss the consistency index as a measure of fit in Chapter 6.

As a final note on weighting, Goloboff et al. (2008) executed a large-scale study to examine the effects of weighting on phylogenetic results. These authors used the implied weights approach under a range of concavity values (k). Their results showed that jackknife resampling frequencies (see Jackknifing section in Chapter 6) increased when characters were downweighted according to their homoplasy; that is, more highly homoplastic characters received lower weights. The highest jackknife scores were achieved under a weak constant of concavity (10–20), as opposed to the stronger values often used with implied weights or successive weighting (e.g., k = 3). This result implies a more consistent phylogenetic result for a given data set than would be obtained if the data were not weighted against homoplasy.

Islands of Trees and Solutions for Very Large Data Sets

The use of branch-swapping algorithms may produce less than optimal results for some data sets (Maddison, 1991) because once an algorithm has found a promising topology—a local optimum or "island"—it may neglect other equally promising topologies simply by virtue of its design. The most effective solutions to this problem were initially conceived to be (1) the use of different starting points (i.e., a tree slightly longer than the shortest tree found without the use of exhaustive branch swapping) from which to begin branch swapping and (2) the use of more exhaustive approaches to branch swapping. The former solution has been the more widely employed. Nonetheless, because of the island phenomenon, it is possible that starting to swap on a tree of 100 steps will result in being stuck on a suboptimal "island," whereas starting to swap on a randomly generated tree of 1000 steps might ultimately produce shorter trees. The result in the latter case would, however, almost certainly take much longer to produce.

When data sets become large, say more than 200 taxa, the total number of possible solutions is immense, and thus recovery of any solution—let alone effectively surmounting the island phenomenon—might be viewed as problematic. One description of the computational state of affairs as of early 1998 was offered by Soltis et al. (1998). These authors showed that combining data sets increased the amount of "signal" in the data, and that solutions could therefore be found in days rather than the weeks or months that had previously been required with the software they

were using. The speed with which most phylogenetic algorithms arrive at solutions is directly related to strength of phylogenetic signal; this property has long been known, although it was not mentioned by these authors. What Soltis et al. found, however, was that whereas individual DNA-sequence data sets with little phylogenetic signal often precluded achieving a computational result, combining these data sets increased the phylogenetic signal, computational times decreased dramatically, and solutions were effected. This counterintuitive result—that a larger data matrix is easier to analyze than smaller ones—may not be a general phenomenon.

Some authors have suggested reverting to inferior methods of analysis in cases where available parsimony algorithms were apparently incapable of processing the data at hand. An example is the use of "neighbor joining" (Saitou and Nei, 1987)—a phenetic technique characterized by Swofford et al. (1996) as purely algorithmic—for no other reason than it produces a single tree in a limited period of time. No matter that neighbor joining requires that discrete data first be converted to distance data, that the form of the tree is influenced by the order of taxon input, and that the single tree produced is suboptimal, whereas in fact many optimal trees may exist for the data set, as was shown by Farris et al. (1996). For further discussion and examples, see discussion of DNA Barcoding in Chapter 10.

A heuristic subsampling approach to addressing the problem of very large data sets was proposed by Farris et al. (1996). Instead of relying solely on the effectiveness of branch swapping to find solutions, their "Jac" program used jackknife resampling procedures (see Chapter 6) and a fast parsimony algorithm to implement large numbers of computations in a relatively short period of time. The results, in the form of a consensus, include only groups that are well supported by the data, but exclude cladograms containing groups totally lacking in support. As noted by the authors, poorly supported groups cannot survive resampling and are therefore automatically eliminated from the results. The rationale for the Jac approach was that the use of conventional parsimony algorithms required weeks of computational time for some data sets, and the consensus of the thousands of trees resulting from the parsimony analysis was very poorly resolved. The Jac approach produces results that include only well-supported groupings that would be useful as predictive classifications. It also provides a relatively efficient way to find a better "starting tree" for branch swapping on very large data sets.

Several authors have implemented heuristic searching shortcuts that speed up the process of discovering shortest trees. Nixon (1998) has shown that the Parsimony Ratchet, a weighting method that can be easily implemented with existing phylogenetic software, has the ability to produce solutions for very large data sets much more rapidly than traditional searching methods. The Ratchet is implemented through the following steps:

1. Generate a starting tree (e.g., a Wagner tree), followed by some level of branch swapping.
2. Randomly select a subset of characters, each of which is given additional weight (e.g., add 1 to the weight of each selected character).

3. Perform branch swapping (e.g., tree bisection-reconnection) on the current tree using the reweighted matrix, keeping only one or a few trees.
4. Set all weights for the characters to the "original" weights (typically, equal weights).
5. Perform branch swapping again on the current tree (from step 3), holding one (or few) trees.
6. Return to step 2. Steps 2–6 are considered to be one iteration, and, typically, 50–200 or more iterations are performed. The number of characters to be sampled for reweighting in step 2 is determined by the user. Weighting between 5 and 25 percent of the characters provides good results in most cases.

Because the Ratchet samples many tree islands with a few trees from each island, it provides much more thorough evaluation of tree space than collecting many trees from few islands. Using the Ratchet in combination with readily available microcomputer hardware and Goloboff's NONA parsimony program produced results in a few hours, whereas those same analyses previously required months or years for analysis, as was the case in the study of Soltis et al. (1998). Test runs indicate efficiency increases of 20–80 times over what was previously possible. A concurrent decrease in the length of optimal trees is also often observed.

Special Considerations When Dealing with Molecular Data

In Chapter 3 we introduced the concept of optimization alignment (or direct alignment) as implemented in the phylogenetics program POY. Under this approach the process of tree formation and the optimization of nucleotide homologies are performed as part of a single operation. Application of this approach is most obvious in those cases where gene regions are length variable, although it need not be restricted to the analysis of such data. The algorithmic approaches used in POY are not radically different than those described above for other parsimony-based programs.

The rationale for employing POY can be viewed from two perspectives. If the insertion of gaps, the extension of gaps, and the substitution of nucleotides (either as transition or transversion events) are all viewed as having equal costs, then POY can be employed in a fashion similar to what might be done when using other phylogenetics programs. Such an approach was described in detail by Faivovich et al. (2005) in their analysis of hylid frog relationships. As stated by those authors, the theoretical justifications for the application of different costs for opening a gap and extending a gap are not obvious. Faivovich et al. apparently felt likewise about applying different costs to transition and transversion events.

If one wishes to view transversion events as being less likely than transition events, and if one wishes to assign differential costs to opening gaps, extending gaps, and deleting nucleotides—as has been argued by many authors—then one might wish to employ POY using a "sensitivity analysis" (Wheeler, 1995). Under this approach, data are analyzed under a matrix of possible parameters, allowing for the assignment

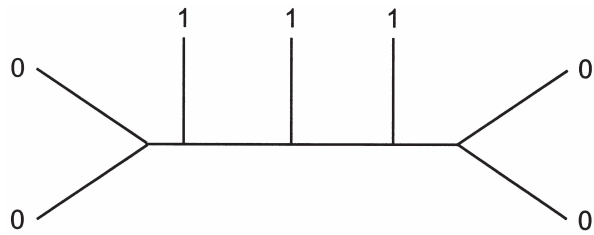

Fig. 5.7. An unrooted tree (network), depicting graphically the character distributions indicated in parenthetical notation in the text.

of differential costs to the various types of changes discussed above. The most "desirable" result under such an approach is not self-evident, however, such that some measure of optimality that spans the range of parameter settings must be applied. This has usually been the incongruence length difference (ILD) or a variant thereof, such as the meta-retention index (MRI; Wheeler et al., 2006b).

Rooting: Additional Discussion

When transformation costs are symmetrical for a given data set (as is almost always the case in phylogenetic analyses today), different rootings of a given tree are exactly the same; that is, the rootings are transparent to the parsimony criterion and produce trees of the same length under "standard" parsimony or equivalent fit under Goloboff's method of implied weights. Therefore, the explanatory power of all possible rootings of a given network is the same.

To understand this concept, consider the following tree, which is depicted graphically in Fig. 5.7:

(0 (0 (1 (1 (1 (1 (0 0)))))))

Which state is "apomorphic," 0 or 1? This cannot be answered. At most, one can say that "in the transformation from 0 to 1 at the base of the tree, 1 is derived, and in the transformation from 1 to 0 in the tip of the tree, 0 is derived," as shown in Fig. 5.7. The only way to determine polarity, then, is to have a tree optimized and rooted, at which time we can read the polarities of each transformation off the tree. Patterns like this are common in sequence data, in which it is not obvious from inspection what the "ancestral" nucleotide at a given site ought to be. As noted in Chapters 4 and 5, the root is usually fixed by including an outgroup established by recourse to previous, higher-level cladistic analysis.

Alternative Approaches to Phylogenetic Inference

Three-Taxon Statements

A novel approach to deriving phylogenetic results from discrete character data was proposed by Nelson and Platnick (1991) under the name "three-taxon

Matrix 1

	Characters					
Taxa	1	2	3	4	5	6
A	1	0	1	0	0	0
B	1	0	0	0	1	1
C	0	1	1	1	0	1
D	0	1	0	1	1	1

Matrix 2

	Three-taxon statements					
	1	2	3	4	5	6
Taxa	ab	ab	ab	ab	ab	abc
A	11	?0	11	0?	0?	000
B	11	0?	0?	?0	11	11?
C	0?	11	11	11	?0	1?1
D	?0	11	?0	11	11	?11

Original data:

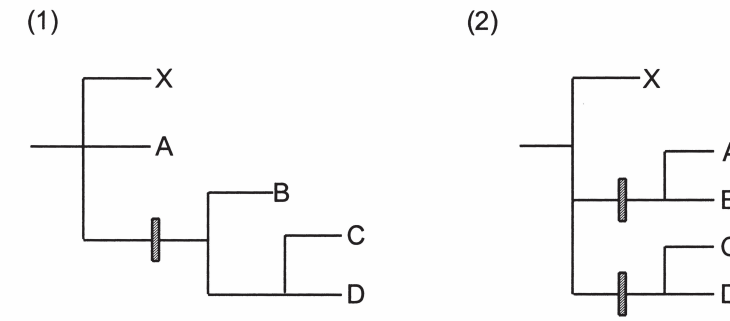

Fig. 5.8. Coding of data for the three-taxon method. Matrix 1 equals original data; matrix 2 equals the same data coded for analysis by the three-taxon method (from Nelson and Platnick, 1991). Each original character requires columns in the new matrix equivalent to the number of three-taxon statements it implies. Thus, character 1 implies C(AB) and D(AB), with the fourth taxon of each alternative coded as missing. Character 6, by contrast, implies three 3-taxon statements, A(BC), A(BD), and A(CD). The original data produced two equally parsimonious cladograms. The three-taxon method produces only cladogram 1.

statements." A given matrix can be recoded under this method as the number of 3-taxon statements the characters represent. The recoded matrix (Fig. 5.8) can then be analyzed using conventional parsimony algorithms. Nelson and Platnick indicated that the method might represent a more precise use of parsimony and that it might in some cases reduce the number of most parsimonious trees or provide resolution of nodes that are ambiguously resolved by standard parsimony analysis. Discussion of the method can be found in Kitching et al. (1998), Williams and Siebert (2000), and Williams and Ebach (2008).

As with any alternative approach, the 3-taxon method has not gone uncriticized (e.g., Farris et al., 1995; de Laet and Smets, 1998). The primary criticism of the 3-taxon method by those authors was that it does not minimize the number of ad hoc hypotheses of homoplasy, but instead treats as independent quantities that are interrelated. Another problem with 3-taxon methodology is that it ignores complementary implied groups (?001) in the expanded matrix, the only justification for which is that these are autapomorphies that do not imply groups. Of course, determining which state is derived requires prepolarization of character states, which, as just mentioned, is often not performed prior to tree search. Although it was quite controversial from a theoretical perspective in the 1990s, the 3-taxon method seems to have been seldom employed in analysis of empirical data.

Maximum Likelihood

A practicing systematist ought to understand the methods that she or he uses, and it is also important to understand the methods used by others, to facilitate critical evaluation of results. Although we do not advocate maximum likelihood (ML) methods in systematics, we describe them here to provide the reader with a basic understanding of their workings and assumptions. Interest in the ML approach (introduced in Chapter 2) derives primarily from the work of Felsenstein (1973, 1978, 2004; see also Sober, 1988; Swofford et al., 1996; Yang, 2006), who was of the opinion that although few prior attempts had been made to apply statistical inference procedures to the estimation of evolutionary trees, ML (or some other statistical inference method) *must* be used to infer them. We, and many other proponents of parsimony, do not see why this should be the case. Nonetheless, with the advent of accessible software that implements the methodology, maximum likelihood has grown in popularity in the past decade, particularly among those involved in the analysis of DNA sequence data. The appeal of ML would seem to derive from the aura of quantitative rigor attributed to statistically based techniques for data analysis and the widespread enthusiasm for probabilistic models of sequence evolution among workers who gather and analyze such data.

We will begin by briefly describing the methodology of ML, and then compare and contrast it to the parsimony approach. Calculating a maximum likelihood tree, as described by Swofford et al. (1996:431), involves the following steps:

1. Start with aligned sequence data.
2. Designate a model of nucleotide substitution based on some "plausible" starting tree (produced using parsimony or a distance-based algorithm such as neighbor joining), which may include such parameters as base frequencies, probabilities of different state-to-state transformations, the proportion of invariant sites, and a rate heterogeneity parameter for the sites that are not invariant.
3. Use a heuristic search algorithm to examine alternative topologies.

4. For each topology, compute the likelihood of the observed distribution of character states among taxa for individual nucleotide sites as the sum of the probabilities of every possible reconstruction of ancestral states, given the model.
5. Compute the likelihood of the entire topology as the product of the likelihood of all sites.
6. The preferred topology is the one that has the highest likelihood. This is a very small number, usually expressed as the log likelihood, in which case the preferred value is the negative number closest to zero.

As opposed to strictly algorithmic methods such as neighbor joining, ML and parsimony both select the preferred topology based on an optimality criterion that requires assessment of multiple alternative trees, and both have the capacity to incorporate a variety of differential weights, either among characters and/or among states of individual characters. However, that is where the similarities between ML and the parsimony approach end.

Let us briefly examine some of the assumptions of ML analysis that differ from parsimony-based cladistic analysis. *First,* because the optimality criterion is maximizing the likelihood of the tree given the model and the data, one must first have an explicit model of evolution for each character in the data in question. Interestingly, several authors (Goldman, 1990; Tuffley and Steel, 1997; Steel, 2002; Goloboff, 2003) have shown that when models that treat all characters the same ("equal weights" assumption) or models that treat every character differently ("no common mechanisms" assumption) are employed, parsimony and ML give the same results. Thus, the ML models that give different results than parsimony are those that treat groups of characters (such as different codon positions in a protein-coding sequence), or different types of character-state transformations (such as transitions versus transversions), as homogeneous classes that differ from one another by simple numerical parameters. Swofford et al. (1996) and others have discussed the nature of the most commonly employed models, which, as noted, mainly relate to differential character-state transformation costs among nucleotides. Clearly the number of possible models is virtually infinite. Yet, the criteria by which this multitude of possibilities may be judged are not clear, and in practice, most users of likelihood select one of 56 standard alternatives available in popular implementations such as PAUP* (Swofford, 2000), PhyML (Guindon and Gascuel, 2003), TREEFINDER (Jobb et al., 2004), or RAxML (Stamatakis, 2006).

The more complex and parameter-rich the model, the better the fit to the data, and the higher the likelihood score. However, a model with too many parameters is considered to have low statistical power and be prone to error, and a simpler model is preferred if it provides an adequate fit to the data. In general, the choice among model alternatives is based on the amount of increase in the likelihood score obtained by making the model more complicated. If this increase is deemed significant, then the more complex model is preferred. Various tests to compare models have been devised based on likelihood ratios, the Akaike Information

Criterion, or other methods (Posada and Crandall, 1998; Alfaro and Huelsenbeck, 2006; Ripplinger and Sullivan, 2008). Alternate model-selection criteria often employ different models for the same data, which in turn can lead to different ML trees. The ambiguity stemming from the lack of a single clear optimality criterion is reminiscent of the methodological multiplicity that caused phenetics to founder in the 1970s.

The deterministic nature of evolutionary models employed by ML is problematic for several reasons. *First,* aside from base frequencies and proportion of invariant characters, which can be determined directly from the data matrix, most of the model parameters are topology dependent. Thus, the evidence used to assign relative weights of transformation types and to determine branch lengths—to build the model—comes from the pattern of character-state transformation implied by some initial topology, the provenance of which is rarely even mentioned in works employing model-based methods. The model in turn determines the transformation probabilities for all sites, for all taxa, for all subsequent analyses. Even if the initial tree is a good one, there is clearly a degree of circularity here, not to mention an inconsistent shift in optimality criterion between the model construction and tree-inferring phases of the analysis.

Second, as noted above, ML models tend to contain relatively few parameters and thus are not able to "realistically" represent the intricacies of evolution in any testable manner. ML does not perform well, for example, when evolution occurs at different rates in different lineages, a not implausible eventuality (Kolaczkowski and Thornton, 2004). Wenzel (1997:36) observed, as have others, that "methods [such as ML] are self-fulfilling and do not provide independent evidence of their legitimacy. Trees built according to a given model cannot refute the model, and therefore it is clear that the model . . . is beyond testing." Parsimony-based cladistic methods, on the other hand, are founded solely on evidence, as discussed in Chapter 2. As pointed out by Siddall and Kluge (1997), even if evolution did not occur, parsimony would still be applicable, although not "justified," according to Kluge (2001).

Third, although models of change for molecular sequence data can be easily constructed, if not easily tested with regard to their reality, the same cannot be said for models of change for morphological characters. For example, on what basis does one determine the probability of change from one state of a morphological character to another—from limbs to wings—and how would one compare probabilities across characters, especially when our experience makes it abundantly clear that rates of change for different characters *are* different? Lewis (2001) has developed a simple ML model for morphological characters, but this is based on the Tuffley-Steel approach mentioned above, so its results would apparently mirror those achieved by parsimony analysis. The means and rationale for applying more complex ML methods across the spectrum of character data remain unspecified.

Fourth, while ML methods usually produce as output a single putatively optimal tree for a data set which may yield multiple equally parsimonious trees,

this does not necessarily mean that ML is providing a more precise (or accurate) interpretation of the evidence. Indeed, Steel (1994) and subsequent authors (Chor et al., 2000; Zhou et al., 2006) have shown that under a given model, there may be multiple likelihood maxima that imply different topologies. As Zhou et al. stated, "[T]he ML criterion alone may not be sufficiently enough [*sic*] to determine the true phylogeny for certain problems even if we are able to obtain a truly globally optimal tree under the ML criterion!"

Finally, we note that the greater complexity and increased quantification of "modern methods" is not per se a virtue. Model-based analyses rely on their purported higher degree of realism for whatever improvements they are believed to exhibit over parsimony analyses. But since there is no way to independently corroborate the degree of realism of a ML model, this is merely a subjective preference. Cladists use parsimony not because they think it is a realistic model of character-state transformation but because it provides the simplest—and most informative—explanation of the pattern of change when the true process that caused the pattern is unknown (Farris, 1983). In the cladistic scheme, character-state transformations can be mapped onto a cladogram, the amount of support or homoplasy a character adds to a given topology can be easily assessed, and its evidential meaning is readily apparent. ML trees, by contrast, are enshrouded in a fog of statistical "sophistication" that obfuscates the relationship between the topology and the evidence from which it was inferred. This indictment may be readily supported by the simple exercise of attempting to reproduce the results of a published empirical ML analysis. All too often, the methods are so inadequately described and ambiguous that this basic tenet of science and desideratum of the early pheneticists—repeatability—is not feasible.

Bayesian Phylogenetic Inference

Because both branch lengths and substitution parameters must be estimated for every alternative topology, ML is much more computationally expensive than parsimony, and large data sets cannot be analyzed easily with parameter-rich, "realistic" models (Swofford et al., 1996). The Bayesian approach to phylogenetic inference uses ML as its optimality criterion but avoids the extensive calculations by employing an approximation technique called the Markov chain Monte Carlo method, usefully reviewed by Huelsenbeck et al. (2002) and Holder and Lewis (2003). The preferred Bayesian topology is the one supported by the distribution of sampled trees with the highest posterior probabilities, a value that is calculated (or approximated) by evaluating the data in light of subjective prior probability values for the substitution model, branch lengths, and even the topology itself. The same flaws described above relating to ML character-state transformation models thus apply equally to the Bayesian approach. Additional criticisms of Bayesian phylogenetic inference relate to problems with assumptions of flat prior probabilities of topologies (Pickett and Randle, 2005) and apparent overestimates of branch probabilities (Suzuki et al., 2002; Simmons et al., 2004).

Statistical Inconsistency and Long-Branch Attraction: The Achilles' Heel of Parsimony?

For three decades, advocates of ML (e.g., Felsenstein, 1978, 2004; Swofford et al., 1996) have rationalized their rejection of parsimony in favor of likelihood on the grounds that it may be *statistically inconsistent*—a systematic error in which an incorrect result is arrived at with greater and greater statistical support with the addition of more data. The standard argument says that, given a particular distribution of character states, cladograms produced by a parsimony algorithm may not accurately represent the true pattern of relationships among the taxa, and support for a wrong topology will increase as additional characters are added. Swofford et al. (1996:429), in their discussion of the likelihood approach, offered the opinion that parsimony ignores information on branch lengths when evaluating a tree, whereas ML treats changes on long branches as more likely than those on short branches. This "important component" of the method explains, according to Swofford et al. (1996:430), the "consistency" of the ML method in cases where parsimony is inconsistent. It should not be forgotten, however, in the evaluation of this argument, that parsimony does compute branch lengths. Nonetheless, the lengths of those branches are relevant only to the extent that they represent the minimum number of character-state changes necessary to form a most parsimonious solution. Autapomorphies, by contrast, contain no phylogenetic information. As framed by Swofford et al., the branch-length argument is therefore irrelevant and misleading as a criticism of the parsimony approach.

The Swofford et al. argument might alternatively be interpreted as meaning that ML uses the information provided by all of the characters in terms of the length of the branch—i.e., the "evolutionary rate" along the branch—while parsimony treats every character independently and thus ignores the information on change-rate along a given branch. This point is also irrelevant as a criticism of parsimony—or conversely, as a presumed benefit of ML—for it was shown 30 years ago by Farris (1979) that path-length distances as applied under the parsimony criterion always store information on genealogy and similarity as effectively as possible. Thus, no information is lost in a parsimony analysis compared to a likelihood analysis, irrespective of the comments of Swofford et al.

Nevertheless, the observation that parsimony *can* be statistically inconsistent is technically correct. But to fully understand the gravity and scope of this problem, we need to examine two issues that the ML advocates typically do not mention: (1) Under what circumstances is parsimony statistically inconsistent? and (2) Is ML immune to this problem?

What are the conditions under which cladistic parsimony behaves in an inconsistent manner? As far as is known, the only situation that leads to inconsistency is "long-branch attraction" (LBA), whereby branches with large numbers of autapomorphic characters evolved in parallel group together, even though the terminal taxa are not each others' closest relatives. Fig. 5.9 shows the paradigmatic four-taxon cartoon of this problem. If the "true tree" has a short internal branch and

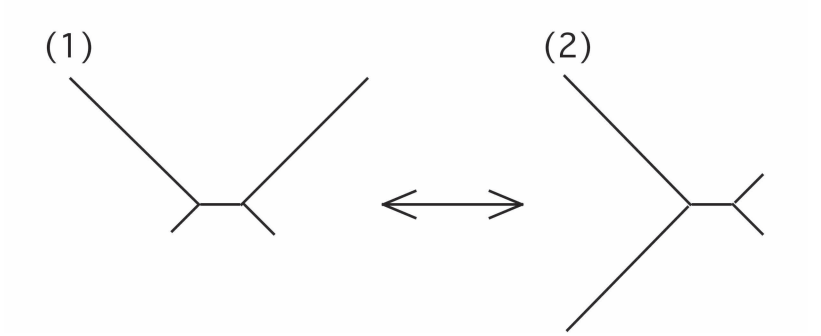

Fig. 5.9. Cartoons of unrooted four-taxon trees, with branch lengths indicating relative amounts of character-state change. When the internal branch is short relative to the branch lengths of two non-adjacent taxa (1), parsimony may favor topology (2). On the other hand, maximum likelihood may favor (1) when the correct topology is (2).

two long nonadjacent branches (tree 1), then independent homoplastic changes on each of these branches may be incorrectly interpreted as synapomorphies, causing them to form a group (tree 2). When more such characters are added, the more strongly the "long branches" are attracted—hence the inconsistency. However, if the two long branches are adjacent to one another (tree 2), then the parsimony method performs better than ML in discovering the "true tree," and ML can even behave inconsistently, preferring topology 1 when the true topology is 2, due to "long-branch repulsion" (Siddall, 1998).

The source of the inconsistency idea, like ML itself as a phylogenetic technique, comes from the work of Felsenstein (1978), as noted earlier in this chapter. Although Felsenstein's inclination was to believe that the parsimony approach—in the sense that it is generally applied in this book—could produce erroneous results, he also stated as an alternative that "the conditions which must hold in order to have lack of consistency may be regarded as so extreme that . . . [his] result may be taken to be a validation of parsimony or compatibility approaches" (Felsenstein, 1978:402). Despite ongoing assertions of its pervasive and pernicious effects (Anderson and Swofford, 2004; Bergsten, 2005), there remains some question as to whether LBA actually occurs, or whether it has been accepted as occurring only by assuming that real data fit Felsenstein's models.

An instructive case study is the empirically based—as opposed to simulation-based—discussions of LBA by Whiting et al. (1997), Whiting (1998), and Siddall and Whiting (1999), which provide instructive cases studies. An analysis of phylogenetic relationships among the orders of holometabolous insects by Whiting et al. (1997) revealed unexpectedly the group Halteria (Diptera + Strepsiptera), among others. These results were based on the analysis of molecular and morphological data that comprised the largest sample of taxa and characters ever used for a higher-level analysis of relationships within the group.

The Strepsiptera, a group of internal parasites of other insects, have novel morphology and appear on what might be termed a "long branch" with many

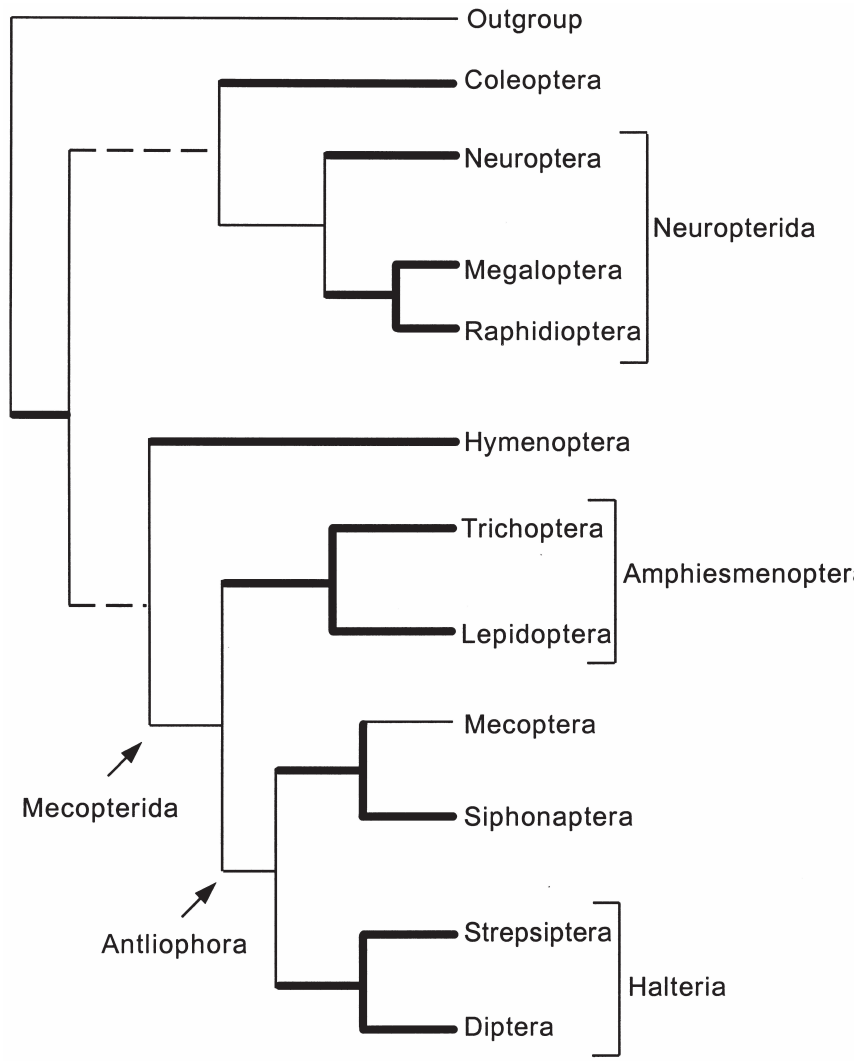

Fig. 5.10. The groupings of holometabolous insects recognized by Whiting et al. (1997). Heavy lines subtend strongly supported groups; thinner solid lines subtend relatively well-supported groups; dashed lines subtend groups with questionable support.

autapomorphies. Their phylogenetic position within the insects has long been a subject of discussion and controversy. On the basis of morphology alone, the Strepsiptera had frequently been treated as related to the Coleoptera. The grouping of Diptera + Strepsiptera, as originally proposed by Whiting and Wheeler (1994) (Fig. 5.10), was summarily rejected by Carmean and Crespi (1995) as being the result of LBA even when appearing as a result in their own analysis,

which was based on a smaller sample of characters (composed only of DNA sequences) and taxa.

The assertions of Carmean and Crespi were independently investigated by Huelsenbeck (1997). He pointed out that no empirical examples of LBA existed in the literature, but he nonetheless assumed that the phenomenon may still exist as an artifact of parsimony methods due to the standard Felsensteinian caveat that they can "converge to an incorrect genealogical tree *as more data are added,* when the assumptions of the method are severely violated" (Huelsenbeck, 1997:69) (italics added). Huelsenbeck did not suggest which assumptions might have been violated in causing parsimony to arrive at "incorrect" answers. His study involved the use of simulated data analyzed under a variety of models of DNA evolution, an example with no more empirical content than that of Felsenstein (1978).

The real significance of Huelsenbeck's assertions may revolve around the issue of addition of more data (i.e., improved sampling). Huelsenbeck consistently retrieved Diptera + Strepsiptera, even though he analyzed the much smaller data set of Carmean and Crespi. The idea that sampling fewer taxa and characters will produce a superior result, while more inclusive sampling will produce an incorrect result, could easily be interpreted as anti-empiricist. More dense sampling of taxa and the addition of character information can do nothing if not provide a more robust hypothesis of relationships (see further discussion under Separate versus Combined Analysis, Chapter 6). Whiting (1998) and Siddall and Whiting (1999) have emphasized that the 13 taxa analyzed by Carmean and Crespi and by Huelsenbeck clearly represent an inadequate sample for inferring relationships among the holometabolous insects. The fact that Strepsiptera—and Diptera—always group with other Antliophora (Mecoptera, Siphonaptera) would, as stated by Whiting et al., therefore suggest relationship rather than artifact of method. The conclusions of Huelsenbeck represent little more than another attempt in the name of LBA to advocate the use of ML methods, and the necessarily arbitrary choice of models of sequence evolution, rather than accepting at face value a parsimonious interpretation of all available data (see also Siddall, 1998). Whiting et al. (1997:38) made the following observations in defense of the Halteria as a natural group:

> A point that is often missed in long-branch attraction discussions is that relative rates of substitution are influenced by phylogeny, and thus we should not be surprised to find cases of sister groups that have high rates of nucleotide substitution; shared elevated rates could indeed be evidence of shared history. The supposition that clades best supported by character data are the ones we should be most suspicious of has the strange result of entailing an inverse relationship between phylogenetic evidence and phylogenetic conclusions. The large amount of molecular evidence supporting the monophyly of the Halteria and Amphiesmenoptera can be taken at face value as indicative of well-supported sister-group relationships and not as foibles of the data or analytical method.

It appears from the Halteria case that LBA may be quite rare in empirical studies with appropriate taxonomic sampling. When apparent sister taxa with long branches are grouped together in phylogenetic analyses, all things being equal, the origin of the "accelerated evolutionary rates" of these lineages is more parsimoniously interpreted as a synapomorphy that unites them rather than homoplastic parallel rate acceleration. So, is parsimony forcing such taxa together, or is ML forcing them apart? There is no empirical means to determine whether parsimony or ML is behaving inconsistently when they favor different alternatives under such circumstances.

Although Anderson and Swofford (2004) stated that "few examples of LBA involving real sequence data are known," Bergsten (2005) reviewed long-branch attraction and argued that "presently suggested examples of LBA are no longer merely a few" based on its frequent invocation as a keyword in the Web of Science database. Of course, wealth of citations does not connote wealth of argument: just because something is invoked frequently in the literature does not mean it is real. "The province of science is not a democracy" (Brady, 1985). Bergsten's concern stemmed from the perceived incongruence of a particular gene or molecular data partition with other evidence or a preconceived notion of what the "correct" topology ought to be (approaches to partitioning vs. combining data are discussed in Chapter 6; the distinction between species trees and gene trees is discussed in Sidebar 11). He explored case studies from mammalian orders and genera of cynipid gall wasps, and provided an involved protocol for testing LBA as an explanation of the perceived incongruence. The goal of these machinations seems to be to rationalize discarding data—either taxa or characters—from the analysis in order to recover a preferred hypothesis. While we think that reexamination of the data can provide insights into improved character codings that decreases homoplasy, we are not convinced that simply labeling perceived anomalous results as instances of LBA is anything more than an ad hoc excuse for retaining a favored unparsimonious alternative in spite of the evidence. We reiterate that, in many cases, thorough taxonomic sampling and selection of characters appropriate to the analysis may diminish the unruly behavior of the data.

Even if we concede that LBA could be a problem for the parsimony approach (which the previous examples and discussion suggests is at best a controversial proposition), there is a second, more general problem implicit in the consistency issue. When we encounter the standard claim that parsimony may be inconsistent, while ML is not, we need to remember that "maximum likelihood" in such statements represents a class of methods, not any method in particular, and the deliberately obfuscated assumption in this claim is that in order to be statistically consistent, the ML model selected must be one that accurately matches the true underlying pattern of character-state transformation in the data. Saying that ML is consistent is thus equivalent to saying that parsimony with the correct character-weighting scheme is guaranteed to yield the true tree. Many of the simulation studies purported to support the superiority of ML over parsimony (e.g., Huelsenbeck,

1995; Yang, 1997) compare ML methods against parsimony using data simulated under the same ML model that was subsequently used to build the tree, effectively setting parsimony up to fail. However, when actual relationships among taxa are concerned, there is no way to know whether a particular model is correct for a given data set or not, leaving ML in the same predicament that its advocates claim afflicts parsimony. As Alfaro and Huelsenbeck (2006:95) stated,

> Models that poorly fit the data can lead to inconsistent behavior of likelihood methods and produce poor or misleading estimates of all the parameters of the phylogenetic model including topology, branch lengths, and substitution rates, as well as influence bootstrap values and posterior probabilities. [embedded citations omitted]

So, a given ML model may be just as theoretically prone to inconsistency as parsimony, and there is no way to tell whether either method is yielding "correct" topologies that correspond with reality.

To sum up, the oft-repeated but plainly misleading claim of statistical consistency appears to be nothing more than a rhetorical bogeyman designed to undermine the parsimony approach in the esteem of ignorant persons intimidated by numerological sophistry. Parsimony is only theoretically likely to behave inconsistently under particular, probably rare, biological circumstances, and ML models may also be prone to inconsistency. Although it is possible to identify incongruence among characters or data partitions, there is no way to tell whether or not a particular method is behaving consistently with a given data set. As discussed earlier, ML-based methods possess several inherent and conspicuous limitations, such as the lack of a clear optimality criterion (or even a means of selecting one), and no advantages that parsimony does not also enjoy. And, paradoxically, unlike approaches used in other fields of science, where data inform theory, with ML-based approaches, theory informs data (see discussion under Statistics, Probability, and Models in the Historical Sciences, Chapter 2). Since the statistical inconsistency red herring is the only criticism of the parsimony approach offered by its detractors to justify the ML endeavor, we conclude that parsimony remains the theoretically and practically superior means to infer phylogenetic relationships.

Suggested Readings

Farris, J. S. 1970. Methods for computing Wagner trees. *Systematic Zoology* 19:83–92. [The classic paper on phylogenetic algorithms]

Farris, J. S. 1983. The logical basis for phylogenetic analysis. pp. 1–36. *In:* Platnick, N. I., and V. A. Funk (eds.), *Advances in Cladistics, Volume 2. Proceedings of the Second Meeting of the Willi Hennig Society.* Columbia University Press, New York. [A critical discussion of the logic of phylogenetic inference]

Goloboff, P. A. 1993. Estimating character weights during tree search. *Cladistics* 9:83–91. [A useful discussion of weighting in general, and implied weights in particular]

Goloboff, P. A. 1999. Analyzing large data sets in reasonable times: solutions for composite optima. *Cladistics* 15:415–428.

Swofford, D. L., G. J. Olsen, P. J. Waddell, and D. M. Hillis. 1996. Phylogenetic Inference. pp. 407–514. *In:* Hillis, D. M., C. Moritz, and B. K. Mable (eds.), *Molecular Systematics, second edition.* Sinauer Associates, Sunderland, Massachusetts. [An extended and eclectic discussion of approaches to inferring phylogenetic trees]

6

Evaluating Results

In this chapter we will examine the tools used to evaluate the results of phylogenetic analyses. Some are broadly applied and generally understood as valid. Others have been less widely applied, although conforming to the philosophy of science advocated in Chapter 2. Still others appear to have serious limitations or do not conform to the hypothetico-deductive philosophy.

Fit Statistics

The term "fit" has been widely used in the phylogenetic literature to indicate the degree to which data conform to a cladogram. The most commonly used measure of fit applied to discrete character data is the *consistency index,* or *ci,* originally proposed by Kluge and Farris (1969). This is a rather simple measure, but one of considerable value. It is computed using the following formula:

$$\text{ci} = \frac{m}{s}$$

where s is the observed number of character-state changes (steps) and m is the minimum possible number of changes given the number of states observed. Values for *ci* range from 1.00 for perfect fit to near 0.00 for the worst possible fit. An example calculation of the ci is shown in Fig. 6.1.

The number of homoplastic steps in a character is then:

$$s - m = h \text{ (homoplasy)}$$

The consistency index (ci) measures the degree of homoplasy of a single character. The "ensemble consistency index" (CI; Farris, 1989) measures the homoplasy of the entire data set. The latter measure is simply the sum of the minimum number of possible changes for all characters divided by the sum of the observed number of changes for all characters. This value is frequently reported in the legends of figures illustrating empirical results, and is often viewed as an indication of the quality of the data. That said, it has been shown that characters exhibiting many

	Characters (nonadditive)						Characters (additive)					
Taxa	1	2	3	4	5	6	1	2	3	4	5	6
X	0	0	0	0	0	0	0	0	0	0	0	0
A	1	0	0	0	1	1	1	0	0	0	1	1
B	1	0	0	0	0	1	1	0	0	0	0	1
C	0	1	0	1	2	1	0	1	0	1	2	1
D	0	1	1	1	2	2	0	1	1	1	2	2
E	0	1	1	0	2	2	0	1	1	0	2	2
m	1	1	1	1	2	2	1	1	1	1	2	2
s	1	1	1	2	2	2	2,1	1	1	2	2,3	2
ci	1.0	1.0	1.0	0.5	1.0	1.0	0.5,1.0	1.0	1.0	0.5	1.0, 0.67	1.0
Tree length = 9							Tree length = 10					
CI (ensemble consistency index) = 0.89							CI (ensemble consistency index) = 0.80					

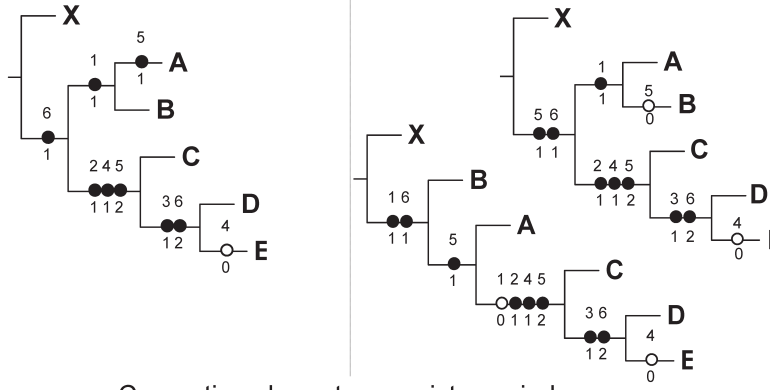

Computing character consistency index

Character 1 $\quad ci = \frac{m}{s} = \frac{1}{1} = 1.00 \qquad ci = \frac{m}{s} = \frac{1}{1} = 1.00$ (tree 2)

Character 4 $\quad ci = \frac{m}{s} = \frac{1}{2} = 0.50 \qquad ci = \frac{m}{s} = \frac{1}{2} = 0.50$

Character 5 $\quad ci = \frac{m}{s} = \frac{2}{2} = 1.00 \qquad ci = \frac{m}{s} = \frac{2}{3} = 0.67$ (tree 2)

Computing ensemble consistency index, non-additive character coding

$$CI = \frac{\Sigma M}{\Sigma S} = \frac{1+1+1+1+2+2}{1+1+1+2+2+2} = \frac{8}{9} = 0.89$$

Fig. 6.1. Computing consistency indices. The data matrices at the top of the figure provide data for 6 characters relating to an outgroup and 5 ingroup taxa; the most parsimonious trees for these data are shown below the matrices. On the left side, the character data are treated as nonadditive; on the right, they are treated as additive. The nonadditive data produce a single tree; the additive data 2 trees. The rows below the characters indicate the values for *m* (minimum number of steps), *s* (actual numbers of steps), and *ci* (consistency index for each of the characters); also indicated are the length of the trees and the *CI* (ensemble consistency index). The states and nature of change in the characters are indicated on the trees; open circles represent reversals; numbers above the line represent character numbers; numbers below the line represent character states. The consistency index is then computed for characters 1, 4, and 5. Finally, the ensemble consistency index is computed for the tree in which the characters are treated as nonadditive.

extra steps, and data matrices with low CI values, can still add resolution and support to a phylogenetic hypothesis (Källersjö et al., 1999).

Because the consistency index does not have a minimum value of zero, Farris (1988; see Farris, 1989) introduced the "rescaled consistency index" (rci), which has a value of zero when a character has as much homoplasy as possible, a desirable feature when used in conjunction with some character weighting functions. Computing the rci requires determining the maximum possible number of steps, *g,* for a character on a cladogram. This can be accomplished by the method shown in Fig. 6.2, whereby the number of possible changes for a two-state character is equivalent to the number of terminal taxa in which the character can change. The rci is then computed as follows:

$$\text{rci} = \frac{g - s}{g - m} \cdot \frac{m}{s}$$

Mickevich and Lipscomb (1991) argued that *concordance* (congruence) between the transformation series and the hierarchy of the tree is a better measure of how well multistate characters fit a cladogram than the consistency index. However, there is no widely accepted formula or measure that can be applied for the concept of concordance.

Measures of Synapomorphy

Measures of synapomorphy are more recent than the consistency index. Farris (1988, 1989; see also Archie, 1989b) used the term *retention index* for a measure that determines the *fraction of potential synapomorphy retained as synapomorphy on a cladogram.*

The retention index (ri) for a single character is computed as follows (Fig. 6.2):

$$\text{ri} = \frac{g - s}{g - m}$$

where g is the maximum number of steps possible for a character, s is the observed number of steps, and m is the minimum number of steps. An example calculation of the ri is shown in Fig. 6.2. The RI (ensemble retention index) can also be computed for all characters on a cladogram. A value of 1 indicates a character that is completely consistent with a cladogram, whereas smaller values approaching zero indicate that a higher proportion of the maximum homoplasy possible for a character is present. Characters that are autapomorphic have ci values of 1 and ri values of 0, indicating no synapomorphy content. A character may have a relatively low ci but still have a relatively high ri. Both of these indices may be used as a basis for establishing a posteriori character weighting schemes (see Chapter 5 and below).

	nonadditive character codings						additive character codings					
Taxa	1	2	3	4	5	6	1	2	3	4	5	6
m	1	1	1	1	2	2	1	1	1	1	2	2
s	1	1	1	2	2	2	2,1	1	1	2	2,3	2
g	2	3	2	2	3	3	2	3	2	2	5	3
ri	1.0	1.0	1.0	0.0	1.0	1.0	0.0,1.0	1.0	1.0	0.0	1.0, 0.67	1.0
Tree length = 9							Tree length = 10					
RI (ensemble retention index) = 0.86							RI (ensemble retention index) = 0.78					

Computing g, maximum possible number of steps

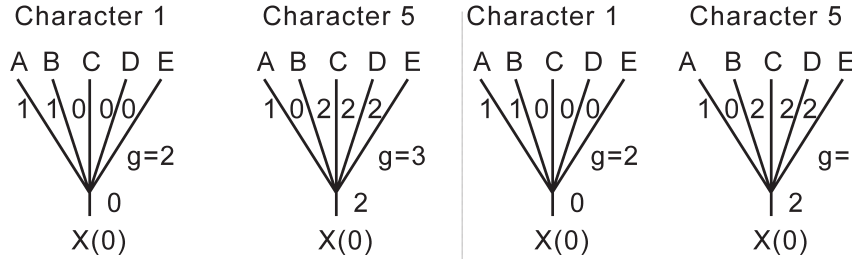

Computing character retention index

Tree 2

Character 1 $ri = \frac{g-s}{g-m} = \frac{2-1}{2-1} = \frac{1}{1} = 1.00$ $\quad ri = \frac{g-s}{g-m} = \frac{2-1}{2-1} = \frac{1}{1} = 1.00$

Character 5 $ri = \frac{g-s}{g-m} = \frac{3-2}{3-2} = \frac{1}{1} = 1.00$ $\quad ri = \frac{g-s}{g-m} = \frac{5-3}{5-2} = \frac{2}{3} = 0.67$

Computing ensemble retention index, additive character coding

$$\text{Tree 2} = \frac{\Sigma g - \Sigma s}{\Sigma g - \Sigma m} = \frac{(2+3+2+2+5+3)-(1+1+1+2+3+2)}{(2+3+2+2+5+3)-(1+1+1+1+2+2)} = \frac{17-10}{17-8} = \frac{7}{9} = 0.78$$

Fig. 6.2. Computing retention indices. Using the same character data and cladograms as in Fig. 6.1, we can compute the retention index, *ri,* for the characters and the cladograms. The necessary values for computing *ri, m, s,* and *g,* are shown at the top of the figure, followed by the tree lengths and the ensemble retention indices. The computation of *g* for characters 1 and 5 is shown in the center of the figure. The nonadditive character data produce smaller values of g because characters can change from one state to any other state in a single step (e.g., 0 → 2 = 1 step), whereas for additive characters the same change represents two steps. Retention indices, *ri,* are computed for characters 1 and 5; the ensemble retention index, *RI,* is computed for the matrix of characters treated as additive.

Resolution of Branches

The desideratum of systematics is a fully resolved hypothesis of relationships among all taxa, which is usually envisioned as a strictly bifurcating hierarchy (Brady, 1985; Brower, 2000b). Complete resolution of this type does not entail the mechanism that every branching event occurred by the bifurcation of a parental

Sidebar 9
Similar Terms, Similar Definitions: The Meaning of Compatibility

The degree with which character distributions are in agreement with one another is a central property in the logic of cladistics. This property is frequently described in the literature using the terms *congruence, concordance,* and *consilience.*

The etymologically similar term *compatibility* will also be found, but it has a distinct connotation. The term is associated with the work of Walter Le Quesne (1969), who outlined the concept of "true cladistic characters" (see also Estabrook et al., 1977). Le Quesne's approach, which is usually referred to as "compatibility analysis" or "clique analysis," is based on the assumption that the best-supported groups are those that are defined by the maximum number of perfectly compatible characters, or *maximal cliques.* A clique of compatible characters perfectly defines the same set of grouping (i.e., none of them show any homoplasy in the preferred topology). At first glance, this approach may appear indistinguishable from "cladistics" as we have described it. However, the following not-so-subtle differences, as described by Farris and Kluge (1979), make it clear that the two approaches are indeed quite different.

First, for any given set of taxa, there may be many maximal cliques. This might not be a problem, but there are no agreed-on criteria by which to choose among these cliques if they contradict one another. *Second,* once the maximal clique is formed on the basis of certain character information, it is not clear what the fate of the remaining character information should be. Therefore, a large percentage of the available characters might never be involved in group formation. This problem is particularly true for molecular data sets, in which most characters often exhibit at least some homoplasy. *Third,* the greater the homoplasy in the data set, the more proportionately limited the support for any given clique will be because the "true" characters must be unique to the group.

In spite of the favorable comparisons of compatibility analysis with cladistics on the part of its proponents, clique techniques have largely been abandoned with the rise of computerized algorithms that can accommodate homoplastic data matrices. It would seem that most systematists do not want to discard the preponderance of their data because it is not perfectly compatible with a single topology. Indeed, Källersjö et al. (1999) have shown that homoplastic characters contain most of the evidence that allows resolution of relationships in some large molecular data sets.

lineage into two daughter lineages, as implied, for example, by the oft-reproduced figure 4 of Hennig (1966) (but see Sidebar 3). Instead, full resolution of a cladogram indicates that the data contain patterns of character distribution that support groups at every level of the hierarchy, maximizing the tree's information content

regarding relationships among the taxa. Of course, a given tree is only as good as the data (and analysis) that underlie it, and it is for this reason that cladograms are typically referred to as "hypotheses" of relationships (see Sidebar 4), always subject to revision with the acquisition of additional evidence.

There are two reasons why a cladogram may not exhibit a strictly bifurcating pattern of relationships (DeSalle and Brower, 1997). First, there may be no character that implies resolution for a given node. The following simple data matrix contains no information that resolves relationships among taxa A, B, and C: All three share state 1 for character 2, which suggests that they form a clade with respect to O, but there is no further information regarding whether the pattern of grouping should be (A(B, C)), (B(A, C)), or (C(A, B)).

O	00
A	01
B	01
C	01

The second reason why a cladogram may not exhibit a strictly bifurcating hierarchy is conflicting character information (homoplasy). In the following simple data matrix, it can be seen that character 3 supports the grouping (A(B, C)), character 4 supports (B(A, C)), and character 5 supports (C(A, B)).

O	00000
A	01011
B	01101
C	01110

In this case, there are three equally parsimonious optimizations of the character-state transformations (six steps each), yielding three alternative fully resolved, equally parsimonious and contradictory trees, and in each of them one character represents a synapomorphy and the other two are inferred to be homoplasies. The parsimony criterion does not provide a means to select among these alternatives without application of a supplemental criterion such as differential character weighting.

Note that in neither of these instances is the lack of resolution among A, B, and C inferred to mean that A, B, and C underwent simultaneous radiation from a common ancestor. Such a hypothesis is an ontological claim about the process of evolution, based on the absence of evidence. Polytomies in cladistics are viewed merely as indications of a lack of resolution due to missing or conflicting data (Nelson and Platnick, 1980).

Multiple Equally Parsimonious Cladograms

As shown above, a given data matrix may imply more than one optimal tree due to ambiguities in implied patterns of character-state transformation. This is not a

limitation of the parsimony method but an accurate representation of the information content of the data. Some alternative analytical methods always produce a single tree as an artifact of their algorithms, without regard to the number of equally plausible trees the data might actually imply. We mentioned the "neighbor joining" method in this regard in Chapter 5 (Islands of Trees and Solutions for Very Large Data Sets). Many phenetic techniques have those same properties. Because of the complexity of their weighting schemes, maximum likelihood methods also usually produce a single topology with the highest likelihood. In neither case do the advantages of having an unambiguous answer outweigh the fact that the answer tells us little about the attributes of the data themselves. The application of parsimony in cladistic analysis yields hypotheses that reflect patterns in the data as closely as possible. Although cladistic analysis of a given data matrix may produce results in the form of one or a few trees, the numbers of trees for another data set may be much higher. The following techniques have been proposed for use in further evaluation of results containing multiple trees.

Consensus and Compromise Techniques

The consensus approach was proposed by Adams (1972) as a way of combining information, from rival classifications or rival trees, for the same set of organisms. The combination of trees from alternative sources, such as morphology versus molecules, as originally conceived by Adams will be addressed in the Separate versus Combined Analysis section below. In this section, we will discuss consensus methods as a means to summarize information from multiple equally parsimonious cladograms (fundamental trees) resulting from analysis of a single data set. Note that the set of fundamental trees from a given analysis may include resolutions that are not supported by any characters, or by mutually exclusive optimizations of conflicting characters, as in the two examples above.

Since the original introduction of Adams' (1972) approach, a number of additional techniques have been described, and until recently their results were lumped under the term *consensus tree*. All members of this class of techniques search for groups of taxa common among trees, and they differ only in the strictness of their requirement for correspondence of the contents of those groups with the original trees. Nixon and Carpenter (1996) suggested that application of the term "consensus tree" should be restricted to the "strict consensus" technique, which produces an output tree containing only groups found in *all* input trees. They recommended calling the output from other techniques "compromise trees," because even though those approaches often produce more completely resolved output trees than does the strict consensus, those trees do not summarize exactly the congruent groupings from all of the input trees.

The following definitions and Fig. 6.3 summarize the attributes of available techniques. In the definitions, *component* refers to a node in the cladogram and all of its less inclusive branches. The confused history of terminology concerning consensus and compromise approaches was reviewed by Nixon and Carpenter (1996).

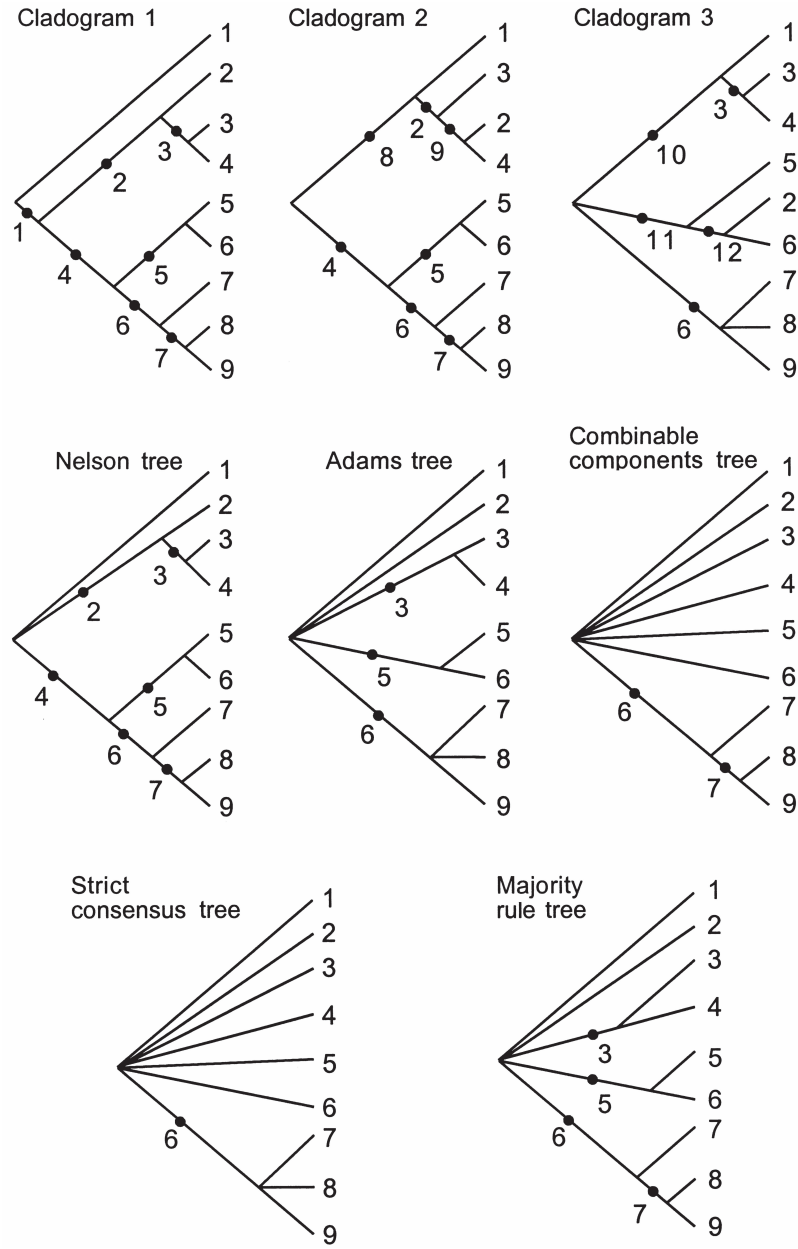

Fig. 6.3. Results of consensus and compromise techniques. Top row: input cladograms; the numbers on the internal branches indicate components shared in common among the fundamental trees. Bottom two rows: consensus and compromise results under five methods, with the components recovered by the tree-combining technique from the fundamental trees being indicated by the numbers on the internal branches (modified from Bremer, 1990).

Consensus technique (strict): Only the monophyletic groups occurring in all input trees are found in the resultant tree; or, in set theory terminology, the consensus tree represents intersection of the clades implied by the fundamental trees. This method was used by Schuh and Polhemus (1980) and attributed to Nelson (1979) by them; the results were later termed "Nelson trees" by Schuh and Farris (1981), and "strict consensus trees" by Sokal and Rohlf (1981). Because one of the compromise tree methods below is also referred to as a "Nelson consensus," the "strict" appellation is preferable. However, the phylogenetics software packages HENNIG86 and PEE-WEE/NONA use the command "nelsen" to produce such trees.

All of the following "consensus" methods are compromise techniques.

Combinable components (Bremer): The resultant tree contains only monophyletic groups found in at least one of the input trees, but is compatible with all of the trees (Bremer, 1990). For comparison of completely resolved trees, the combinable components (CC) and strict consensus trees are the same. Secondary comparison of consensus trees by the CC method (e.g., Lanyon, 1993) can lead to erroneous over-resolution (DeSalle and Brower, 1997).

General (Nelson, after Page, 1989): The resultant tree contains all replicated components and all nonreplicated components combinable with the replicated components and with each other (Nelson, 1979).

Adams: Unstable components and taxa are pulled down to the first node on the cladogram that summarizes the different topologies (Adams, 1972). This method may imply groups that appear in none of the input trees.

Majority rule: The resultant tree contains the monophyletic groups found in over 50 percent of the input trees (Margush and McMorris, 1981). This is the weakest of all possible techniques because groupings incongruent with the compromise tree may exist in the 49.99 percent of the trees not used to form the compromise. Nevertheless, it is this sort of "consensus" that serves as the basis for many of the resampling procedures used to assess tree quality (discussed below).

Strict consensus and compromise results have been criticized as not providing the most efficient explanation of the data on which the input cladograms were based (e.g., Miyamoto, 1985). Bremer (1990) argued that they are, nonetheless *useful for forming classifications* because they summarize information on groups (the recognition of taxonomic congruence) for which there is support in the data. This aspect of their utility exists in those not-infrequent situations where multiple cladograms exist and where other parsimony-consistent techniques do not resolve the choice because the structure of the data themselves do not permit it.

The consensus may often not be well resolved, but common information on grouping will nonetheless be faithfully reproduced. Compromise techniques all fail—to a greater or lesser degree—to transmit information on groupings found in all of the input trees. As noted above, the results of Adams' technique may even include groups not found in any of the input trees, and the majority rule approach may have ignored information in direct conflict with the result.

Thus, as pointed out by Nixon and Carpenter (1996), the consensus contains only those branches that unambiguously support all possible optimizations of the

Sidebar 10
Topology: The Shapes of Cladograms

Should we expect the hypotheses of phylogenetic relationships reflected in cladograms to have a particular pattern of branching, for example, *symmetrical* versus *pectinate?* Practitioners of phenetics at one time argued for the desirability of techniques producing trees with symmetrical branching, but it has been long argued (Strickland, 1841, see Sidebar 12) and formally demonstrated (Farris, 1976a) that there is no reason to expect symmetrical trees over asymmetrical, or vice versa. There is thus no reason to include tree shape as a criterion for choice of method. Whether phylogenetic relationships actually take one form more commonly than the other is irrelevant for phylogenetic methods, but it is clear that asymmetry in trees appears to be quite common. Asymmetrical cladograms imply a greater degree of "nesting" of synapomorphic characters, and therefore a greater degree of implied character support for the more distal branch points than would be the case for a symmetrically branching tree with the same number of taxa (see, e.g., Mickevich and Platnick [1989], concerning the information content of classifications).

Treelike structures depicting phylogenetic relationships have been drawn in many different forms. The myriad possible number of cladograms for even a limited number of taxa makes it desirable to draw cladograms to facilitate ease of comparison of branching patterns. One convention—although not universal—is for cladograms to always branch to the right as shown in Fig. 6.4, so that the observer can predict the position of taxa forming successive sister group relationships. Note that both of these alternatives are supported by four character-state transformations.

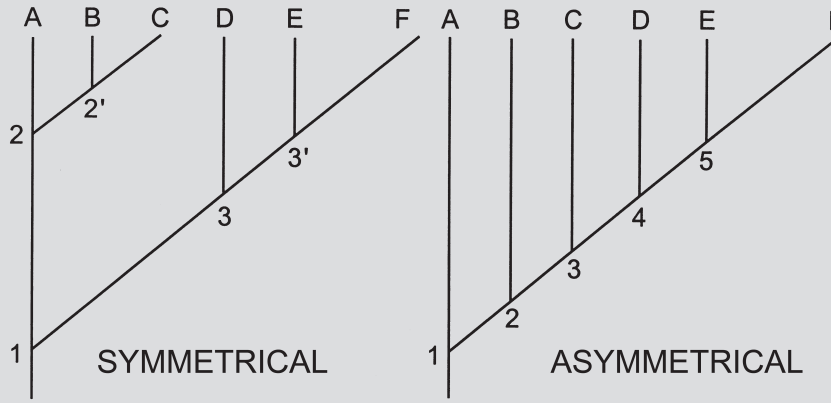

Fig. 6.4. Comparison of symmetrically versus asymmetrically branching cladograms, showing the greater degree of nesting of synapomorphies in the asymmetrical topology on the right.

character data. This will not be true of the results of compromise techniques. Therefore, the consensus is the obvious preference among all techniques proposed because its results are the only ones that receive unequivocal evidential support.

Successive Approximations Weighting

Carpenter (1988) recommended successive approximations weighting as an auxiliary criterion to select among—and thereby reduce—the numbers of equally most parsimonious trees often found when using parsimony algorithms in phylogenetic analysis. He argued that the results would be superior to those of consensus approaches because there would be one or a few trees that described the data optimally, rather than a single, poorly resolved tree of suboptimal explanatory power. The approach for implementing successive weighting has already been described in Chapter 4.

Many authors have applied the successive approximations weighting approach advocated by Carpenter and shown that it often greatly reduces the total numbers of most parsimonious trees. However, an apparently confounding result may be a SAW tree different from any of the most parsimonious trees to which successive weighting was applied. Such a result could be considered ambiguous and disregarded; however, there may be reasons to consider one or more such trees as the most desirable of all trees produced during analysis of the data.

As an example, consider the arguments of Platnick et al. (1991), who, while conducting a phylogenetic analysis of haplogyne spider relationships, found 10 cladograms of equal length, on the basis of 67 characters for 43 taxa. When these results were successively weighted, the authors found 6 cladograms with stable weights, none of which were in the initial set of 10. Of those 6, Platnick et al. deemed one preferable because it was among the most highly resolved and therefore the most informative of the 6, and was—when weights were restored to their original equal statures—only one step longer than the original 10, whereas others among the 6 were as much as three steps longer. The choice of that tree might find further justification in the fact that it was also the one produced under the "fittest tree" approach of Goloboff discussed in Chapter 5 (Platnick et al., 1996). Whereas nearly all previously published analyses had accepted the most parsimonious tree(s) as the answer with greatest explanatory power, and therefore preferred, Platnick et al. (1991) argued that treating all characters as being of equal weight biased the result in favor of some characters of lesser explanatory power.

Data Decisiveness

It has been argued, erroneously as we saw in Chapter 2, that homoplasy in and of itself limits our ability to conduct phylogenetic analysis under parsimony.

A measure of *data decisiveness* was developed by Goloboff (1991) as a way of distinguishing amount of homoplasy from confidence in results. Data decisiveness shows that there is greater reason to prefer a result in which one tree with relatively high homoplasy is generated, as opposed to a result comprising thousands of equally parsimonious and nearly most parsimonious trees, even though those trees have a relatively high consistency index. Substantially homoplastic data may be relatively decisive; that is, they may allow for a clear choice among cladograms. This conclusion is concordant with the observation of Farris (1983) that just because parsimony attempts to minimize character change, parsimony can nonetheless be applied even though character change is not minimal. We may therefore conclude that a large amount of homoplasy does not, ipso facto, imply lower plausibility of results (see also Källersjö et al., 1999).

Separate versus Combined Analysis: Total Evidence versus Consensus

Some authors have argued that we should treat data from different sources, or sets of characters evolving under putatively different evolutionary models, as separate categories of evidence for a given set of taxa (Bull et al., 1993; Miyamoto and Fitch, 1995). Some examples of contrasting "kinds" of data include morphological versus molecular, larval versus adult, and morphological versus behavioral. Assessment of the degree to which these data types describe the same set of relationships for a given group of taxa would seem to be a central problem for systematics. Examination of arguments on the proper methods for addressing this issue allows for the identification of essentially two opposing approaches—indeed philosophies.

Total Evidence

Proponents of this point of view argue that all data for a set of taxa should be pooled and analyzed simultaneously. The rationale is that only through such an approach can total agreement among data for the set of taxa be properly assessed. The term *total evidence* was introduced to systematics by Kluge (1989) and Kluge and Wolf (1993), who appropriated it from the inductivist philosophical literature (Rieppel, 2005b). *Combined analysis* and *simultaneous analysis* have also been recommended as possibly more appropriate labels (Nixon and Carpenter, 1996).

Consensus

The alternative viewpoint—sometimes called *taxonomic congruence*—is that different data sets for the same set of taxa should be analyzed independently and

the commonality of conclusion should be judged via the application of consensus methods to the topologies generated by those separate analyses. The primary arguments used to support this approach are that (1) "independent" data should be subject to independent analyses (e.g., Bull et al., 1993); (2) discrete character data and distance data cannot be analyzed simultaneously in their native form and therefore demand the use of consensus (de Queiroz et al., 1995); and (3) DNA sequence data may "swamp" morphological data if the two are analyzed together because of the much greater number of data points involved (Kluge, 1983).

To clarify the history of usage, it should be noted that the term *taxonomic congruence* was used by Mickevich (1978) in reference to the degree to which classifications based on different data sets imply the same conclusions, an idea originally proposed in the literature on life-stage concordance in holometabolous insects (Dyar and Knab, 1906) and later addressed by pheneticists (e.g., Rohlf, 1963; Michener, 1977). The work of Mickevich and others (e.g., Schuh and Polhemus, 1980; see also Schuh and Farris, 1981) used consensus techniques in attempts to refute the claims of pheneticists that their classificatory techniques produced more informative and stable results than cladistic techniques. In the work of Mickevich, the data were of ostensibly different types—for example, morphological and allozyme; in the case of Schuh and Polhemus, subsets of the total data set were selected at random. Thus, the more recent usage of "taxonomic congruence" as a synonym of "consensus" confounds approaches with very different aims and methods.

The differences between the three approaches are clarified in Fig. 6.5. It should be obvious from what has been said so far, that "total evidence" and "consensus" are approaches to judging data. 'Taxonomic congruence," in the sense of Mickevich, refers to an approach for judging the efficacy of methods. Indeed, for Mickevich (1978), the question was not whether different data sets would tell the same story—she assumed it—but rather how to judge the effectiveness of different approaches to classification for recovering that story.

Having clarified the terminology and outlined some basic tenets, how then might we assess the arguments for and against the total evidence and consensus approaches?

Evaluating the Total Evidence Approach

The theoretical rationale for total evidence is the same argument as that for parsimony as an integral part of method in science (Kluge, 1989). There also appear to be sound empirical reasons for combining data, such as the observation that combined analysis of datasets with substantial homoplasy may produce results showing greater congruence than separate analyses of the same data sets. A particularly striking example of this phenomenon was demonstrated by Gatesy and Baker (2005) in their reanalysis of genomic data from various yeast species originally published by Rokas et al. (2003). They found that combining data from

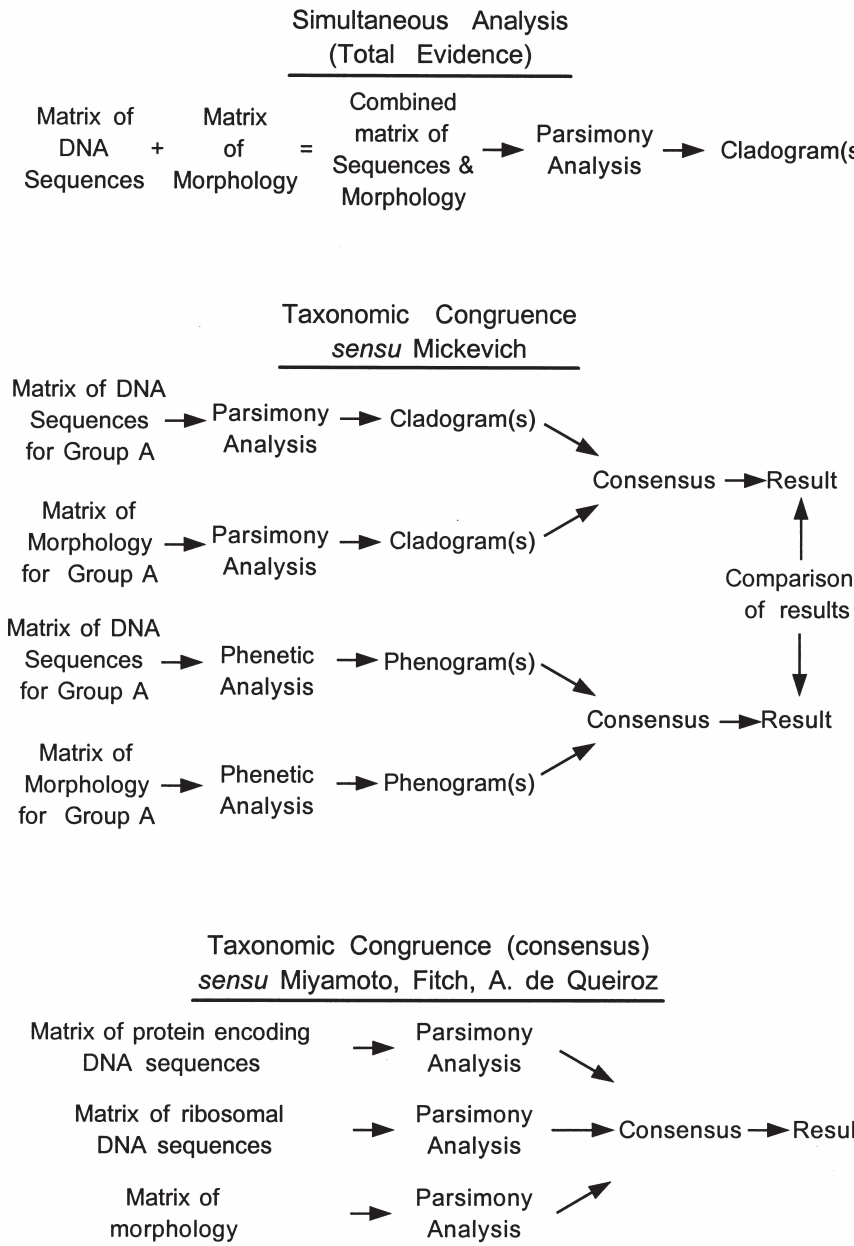

Fig. 6.5. Comparison of three analytic approaches to cladistic analysis: *total evidence* (simultaneous analysis) as originally proposed by Kluge and Wolf; *taxonomic congruence* as used by Mickevich to judge the ability of methods to produce congruent classifications from different data sets for the same taxa; and *consensus* as used by Miyamoto, Fitch, and A. de Queiroz to evaluate the conformity of multiple data sets to a preconceived "true" answer.

47 genes that individually yielded the "wrong" tree produced the "correct" one—bearing out Farris' (1983) prediction that homoplasy is random, and phylogenetic signal will prevail even if homoplastic character-state transformations greatly outnumber synapomorphies.

Arguments against total evidence are of three types. *First,* cladograms derived from certain data sets may not reflect the *true* phylogeny for the group, a "fact" that will be obscured by the total evidence approach (Bull et al., 1993). Our discussion of the philosophy of science in Chapter 2 leads us to reject this argument because we can never know the true tree, and if we did we would have no need for the results of phylogenetic analysis.

Second, it has been argued that because not all data types can be combined, as for example, distances (which are not attributes of taxa) are not combinable with discrete character data, some data may have to be excluded from a total-evidence analysis (de Queiroz et al., 1995; Miyamoto and Fitch, 1995). Combining such data, would, per force, require the use of consensus techniques. The exceptional cases necessitating the use of consensus certainly offer no necessary rationale for analyzing all data subsets separately and then seeking the final answer via consensus. In those individual cases where analysis via consensus is necessary, then the method should be applied if it is believed that the non-character–based data are worth considering. Some authors (e.g., Brower et al., 1996) have suggested that such data should be ignored.

Third is the debate over what, from a philosophical perspective, actually constitutes "total evidence." Rieppel (2005b, 2007b) has criticized what he calls "cladistic instrumentalism," the assumption that data can be uncritically amassed in the matrix and sorted out by character congruence in the phylogenetic analysis, a position espoused by Kluge (2003) and Wheeler et al. (2006a). This argument revolves around rather esoteric arguments concerning homology and character recognition, but it seems clear enough from the discussion in Chapter 3 that characters are something more than raw observations and that not every potential attribute of an organism will prove to have value as a taxonomic character. Thus, the "total evidence" would seem to be all the characters the systematist has determined may have evidentiary value, just as the *New York Times* publishes, "all the news that's fit to print."

Evaluating the Consensus Approach

The *primary* argument for consensus seems to be that the aim of phylogenetic studies is to find the "true phylogeny," and that not all data sets are equally capable of revealing that result (Swofford, 1991; Bull et al., 1993; de Queiroz et al., 1995; Miyamoto and Fitch, 1995). By extension, if all data are combined in a single matrix, then the correspondence—or lack thereof—of subsets of the data to the true phylogeny will be obscured. Knowledge of the "true phylogeny," according to these authors, may be derived from simulations, studies of well-supported phylogenies of natural groups, and from known phylogenies of laboratory bred and

domesticated groups (Miyamoto and Fitch, 1995). These authors seem unwilling to admit that the "true phylogeny" of the millions of extinct and living species can never be determined by extrapolation from "experimental phylogenetics" (Sober, 1993). Genealogical relationships will be understood through the application of systematic inference. It should also be pointed out that advocates of the simultaneous analysis approach nonetheless often employ data partitioning as a means to explore patterns of variation in the data (e.g., Miller et al., 1997; Judd, 1998).

A *second* argument in favor of consensus is that *independence* is more likely for characters from different data sets than for characters from the same data set, and that the importance of independence among data sets justifies using the consensus approach. Yet, the independence of characters will be no greater using consensus than would be the case in a combined data set, and therefore the argument does not in and of itself offer a justification for the method. Indeed, DeSalle and Brower (1997) pointed out that if data partitions are viewed as "independent," then the characters contained within those partitions must de facto be nonindependent, a violation of the assumptions of most systematic methods (Farris, 1983; Felsenstein, 1983). This perspective also leads to the counterintuitive conclusion that the larger a data partition is, the less weight its characters should bear in determination of the hypothesis of relationships via consensus.

A *third* argument, stemming from ideas promoted by Felsenstein and Sober (see Chapter 2), suggests that parsimony may provide misleading results if there is a high degree of homoplasy. In this view, if some data sets (subsets) are highly homoplastic, they should be analyzed separately because when combined in a simultaneous analysis, the result could lead to an erroneous conclusion. We have argued against this logic at every turn, beginning in Chapter 2. As pointed out above, it has no methodological or empirical basis. Indeed, the work of many authors (e.g., Wheeler et al., 1993; Brower and Egan, 1997; Soltis et al., 1998; Gatesy and Baker, 2005; Schuh et al., 2009; among many others) indicates that whereas individual molecular data sets for a given group of taxa may produce what might be viewed as meaningless or "wrong" results because of homoplasy or the absence of group-forming variation, when combined these same data sets produce a much stronger phylogenetic signal.

Fourth, studies combining disparate data types have failed to support the belief that sequence data will overwhelm or "swamp" morphological data and therefore influence the result disproportionately (e.g., Chippindale and Wiens, 1994; Miller et al., 1997). If we assumed that all sites in a DNA sequence varied in an informative way across the set of taxa being analyzed, then sequence data might overwhelm morphology in any given analysis. All empirical evidence shows, however, that the number of informative nucleotide sites is probably on the order of 20 percent or less for most studies and that the data are substantially homoplastic. Many combined morphology-DNA sequence data sets contain a proportion of morphological characters roughly equal to 20 percent of the total number of nucleotides being analyzed. Furthermore, the total evidence (simultaneous analysis) approach would, in general, argue that data set size should be irrelevant, and that character

Sidebar 11
Gene Trees versus Species Trees: Wherein Lies the Holy Grail?

The distinction between "species trees" and "gene trees" was first introduced by Morris Goodman (viz., Goodman et al., 1979), but was implicit in Fitch's (1970) writings on paralogous genes, represented as multiplications of portions of the genome. A *species tree* in Goodman's view was one indicating a "known" scheme of phylogenetic relationships. A *gene tree,* by comparison, described a scheme of relationships—based on genetic (molecular level) components such as amino-acid or DNA sequences—that might or might not conform to the species tree. In the work of Goodman et al. (1979), the "true" phylogeny—species tree—was proposed on the basis of non-sequence data, although what data Goodman et al. actually used to derive that scheme of relationships is totally unclear in their paper. More recently, Maddison (1997) discussed the gene tree–species tree congruence issue, assuming a "true phylogeny," but without indicating how it might be recognized as distinct from any possible scheme of phylogenetic relationships based on empirical data.

The original idea of Goodman was extended, by way of explanation, when Tajima (1983) noted that—for certain genes—within-group variation can be greater than between-group variation, even in mitochondrial genes where recombination is negligible. Tajima concluded that it is therefore possible to reach incorrect phylogenetic conclusions when certain nucleotide sequence data are analyzed by themselves; these results he referred to as *gene trees.* Further examples of processes that could produce gene trees not corresponding to species trees are, according to Doyle (1992): (1) *horizontal gene transfer,* (2) *introgression,* (3) *ancestral polymorphism,* and (4) paralogous gene families as originally envisioned by Fitch and Goodman et al.

The validity of the gene tree–species tree argument was questioned by Brower et al. (1996:434) when they noted that the "attention paid to them [gene trees] in the literature may reflect more the unease they inspire in our phylogenetic paradigm than their prevalence in nature." These authors further stated that a significant number of examples citing the confounding nature of "gene tree" data are derived from analyses whose methods invalidate the conclusions in the first place, were based on evolutionary models that might be unrealistic, or for whose use there was no justification. We might add that the question of whether population-level variation is amenable to phylogenetic analysis had already been questioned by Hennig, who deduced that variation at this level is nonhierarchic, or *tokogenetic* (see also

Davis and Nixon, 1992). Many examples of introgression would appear to fit in this category.

The gene tree–species tree dichotomy is strongly associated with the idea that phylogenetic analysis aims to discover the "true tree" for the group of taxa under study, and that the evidence in hand might be misleading. We discussed in Chapter 2 that such a view would seem to be on philosophically and scientifically shaky ground. As noted by Brower et al. (1996:442), "If we believe there is a hierarchical pattern, then we should expect the data to reflect that pattern alone. . . . The best estimate of hierarchical relationships is still derived from parsimonious interpretation of all the data." Alternatively stated, the strongest test of valid comparison is the recovery of a hierarchic pattern from empirical evidence.

The discovery of that pattern, whether on the basis of gross morphological data, behavioral data, or molecular-level data, ultimately rests on theories of character homology and transformation. If we assume that duplicated portions of the genome—paralogs—cannot on their face be distinguished from one another and will therefore be associated erroneously, we will have compared nonhomologs–a mistake of character analysis. Obviously, if we knew the comparisons to be made were erroneous, we would not make them in the first place (see discussions in de Pinna, 1991; Vrana and Wheeler, 1992). The strongest test of homology theories is in the discovery of congruence. Therefore, incongruent schemes might suggest comparisons of nonhomologous sequences. But, we find that the gene tree–species tree argument has frequently been used to explain perceived incongruence, a priori. As Hennig (1966:121) stated, "'phylogenetic systematics would lose all ground on which it stands' if the presence of apomorphous characters in different species were considered first of all as convergences (or parallelisms), with proof to the contrary required in each case."

We note that the hand-wringing over this issue seems to have abated somewhat in the twenty-first century. This could be because familiarity breeds contempt: The "gene trees" now outnumber trees based on other types of data for many taxa and have become a commonplace currency of phylogenetic inference. Or perhaps it is because the DNA data corroborate prior hypotheses of relationship in most instances. Thus, special concern is no longer warranted beyond the properly skeptical view that any piece of evidence could be misleading. The terminology is, nonetheless, still used. We argue that the "gene tree/species tree" distinction should be replaced with terms such as "molecular partition result" and "total evidence result," which changes the emphasis from the correspondence of evidence to truth, to comparisons concerning the coherence of evidence.

congruence should be the final arbiter in judging the phylogenetic value of data. A large body of empirical studies suggests that indeed this is the case.

Arguing against consensus, some authors have emphasized that the approach does not produce results that optimally describe the data because the consensus result is usually less well resolved than any one or all of the input phylogenies. Thus, information on characters is lost (Miyamoto, 1985), even though information on shared groupings is not. This is essentially the rationale for total evidence given above.

In summary, the only strong argument for taxonomic congruence would seem to be in the sense that the term was used by Mickevich (1978), as a test of the efficacy of methods. All other arguments for consensus as an analytic technique appear to be based on preconceptions about the nature of the data and of the expected results. Indeed, a substantial body of empirical data is now accumulating with the strong suggestion that simultaneous analysis of molecular + molecular data sets or molecular + morphological data sets produces results with higher consistency and retention indices, the strongest indicators of hierarchic structure within the data. This conclusion does not, however, negate the value of consensus for revealing groupings for which unequivocal character support exists in a data set and for the recognition of those groups in formal classifications.

Supertrees

With the proliferation of phylogenetic hypotheses based on DNA sequences has come an attempt to stitch together trees containing different samples of taxa into a single "supertree" via topological "consensus" meta-analyses (Baum, 1992; Sanderson et al., 1998; Bininda-Emonds et al., 1999; Wilkinson et al., 2005). Supertrees offer an intuitively appealing means to synthesize phylogenetic information, yet the method relies on compromise approaches, such as combinable component, discussed above. Accepting a topology at face value without consideration of support for its various components ignores underlying patterns of homoplasy that might emerge if the evidence were analyzed in a globally parsimonious framework (Barrett et al., 1991). Gatesy et al. (2002) have demonstrated that the supertrees approach can lead to unparsimonious hypotheses that are incongruent with the cladogram implied by the data when they are analyzed as a "supermatrix," and Goloboff (2005) has pointed out some other disconcerting flaws with recent efforts to formalize supertree meta-analytical procedures.

Measures of Support and Stability of Results

Approaches for evaluating support or stability of phylogenetic results have been devised on the assumption that we might wish insight beyond the application of parsimony alone. Some measures purporting to provide such insights are statistically based, others are not. Brower (2006b) drew the distinction between support

and stability as follows: *Support* is the degree to which the data in the original matrix favor the most parsimonious topology over alternatives, and is a parameter of the data. *Stability,* by contrast, is the degree to which pseudoreplicated subsamples of the original data discover the same branching patterns that are present in the most parsimonious topology. We will discuss one support measure and several measures of stability.

Branch Support

As a way of determining support for branches as implied by the original data, Bremer (1988, 1994; see also application in Davis, 1995) proposed a measure based on the number of extra steps required to lose a branch in the consensus of nearly most parsimonious trees. The idea can be stated alternatively as the difference in length between the most parsimonious trees and the shortest tree in which the branch of interest is not resolved. *Branch support* (BS) values, also referred to as *Bremer Support* values and *decay indices,* are usually reported as an integer for each branch in the consensus of trees one step longer than most parsimonious, two steps longer, and so on (Fig. 6.6). BS values range from zero to infinity. The higher the BS, the more contradictory evidence would need to be added to the matrix to erode support for a given clade. However, the meaning of the number is not entirely clear because of the complexity of interactions among character data. Branch support can be calculated either by searching for anticonstraint trees (the shortest tree that does not contain clade *x*) or by retaining trees incrementally longer than the shortest tree and observing which nodes collapse. Both of these methods can fail to discover all the possible trees and so may overestimate the BS value.

An interesting property of BS values is that they can be calculated for individual characters as well as for an entire data set, and the values are additive. Baker and DeSalle (1997) described *partitioned branch support* (PBS) as a measure for assessing the contribution of different data partitions to support for the topology generated by simultaneous analysis. This allows a means to assess the degree of congruence or incongruence for partitions at individual branches, rather than simply for the tree as a whole. PBS values can be either positive or negative depending on whether a particular partition supports or contradicts a given branch. Gatesy et al. (1999) have discussed the emergent synergy among partitions as assessed by this approach. Brower (2006b) provided a review of the methods that included instructions and examples on how to calculate BS and PBS values. An analog of the method has been developed for maximum likelihood by Lee and Hugall (2003).

Jackknifing

The *jackknife* produces "pseudoreplicate" data matrices in which one (or more) row of data is removed from the data matrix for each sample, the new matrix is analyzed, then that row is replaced and another withdrawn for the next sample,

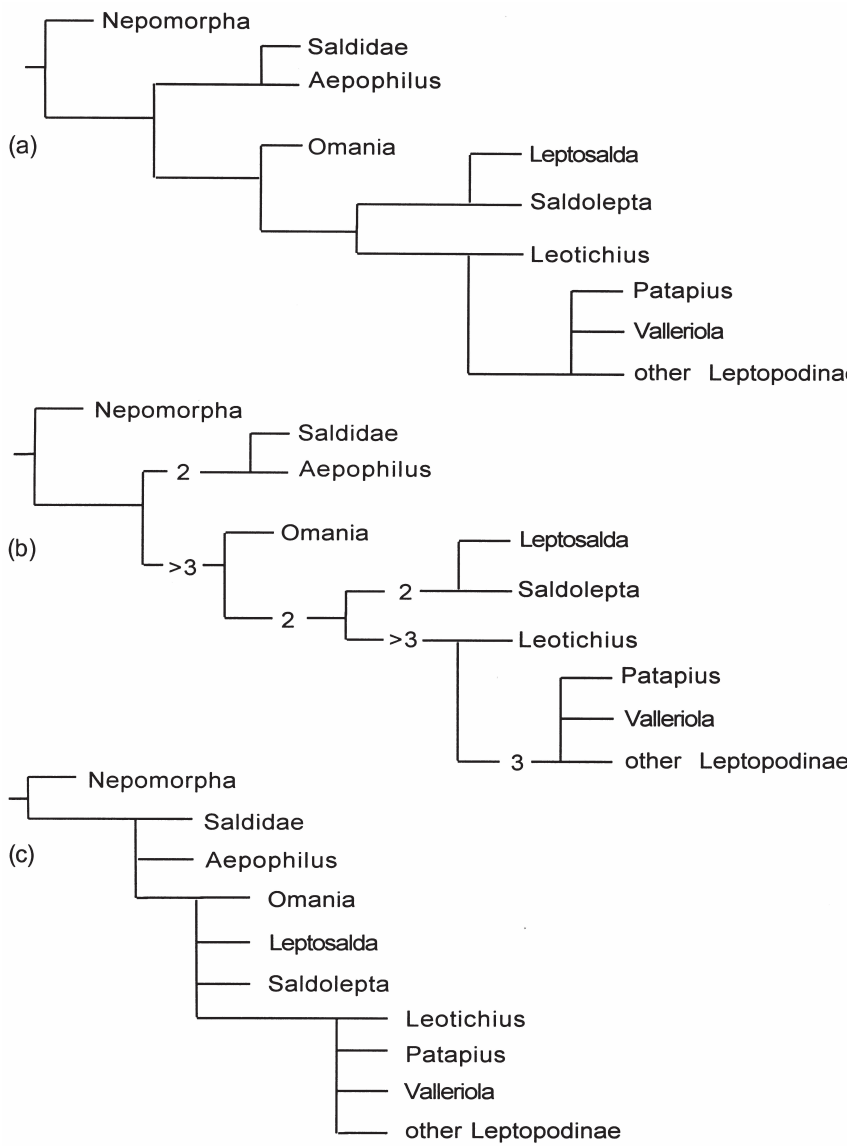

Fig. 6.6. Branch support values for the Leptopodomorpha data set of Schuh and Polhemus (1980) as generated by Goloboff's program NONA. (a) Most parsimonious tree. (b) Tree with branch support values for trees three steps longer than most parsimonious. (c) Consensus of 9 trees used to calculate branch support values given in b.

```
tread
( 0 ( 14 ( ( 13 (11  12 ) ) (3 5 6 10 ( 7 ( 8 9 ) ) ( 4 ( 1 2 ) ) ) ) ) ) ;
proc/ ;

CONSENSUS TREE:  8 NODES (CUTOFF VALUE:  50)
Frequency  index:     0.528
```

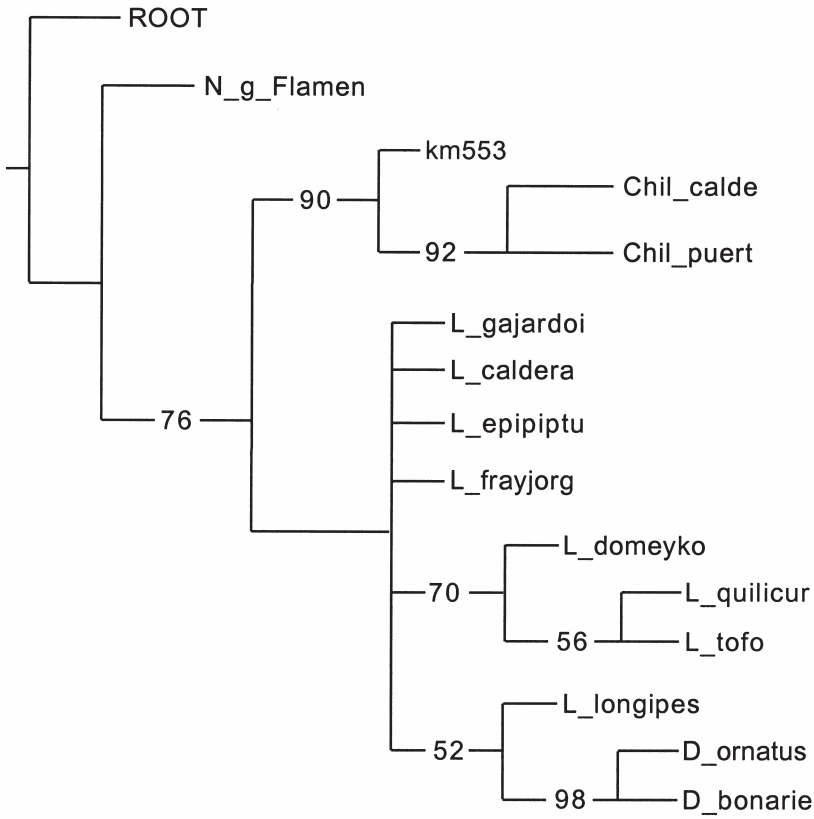

Fig. 6.7. Jackknife results for a small data set as produced through the use of Goloboff's program NONA and a jackknife utility program, based on fifty replications. The consensus contains those clades for which there was jackknife support in more than 50 percent of the trees (the cutoff value). The numbers on the nodes represent the percentage of trees in which the nodes occurred.

until all such combinations of samples have been analyzed. Jackknife results are reported as a proportion of the cladograms in which a clade occurs (Fig. 6.7). The use of a taxon jackknife was proposed by Lanyon (1985; see additional discussion in Siddall, 1995) as a method for assessing inconsistencies in distance data. It has also been used as a fast heuristic method for finding shortest trees in large

data matrices (Farris et al. 1996; see Chapter 5), but here we discuss it as a measure of tree stability. Of all data subsampling and randomization methods so far proposed, the taxon jackknife may offer the greatest appeal because it does not attribute support to data where none actually exists and is not affected by the presence of autapomorphies. A character jackknife that analyzes repeated subsamples of characters for all taxa can also be employed, but most enthusiasts of character resampling seem to prefer bootstrapping.

Bootstrapping

The *bootstrap,* as applied to phylogenetic analysis by Felsenstein (1985), functions by "resampling with replacement." It is probably the most widely used method for assessing "support" (actually stability) in phylogenetic trees, and has been employed as a tool for testing the "significance" of branches in methods like neighbor joining and maximum likelihood that tend to find a single shortest tree (see discussion in Chapter 5). A bootstrap analysis begins by constructing a pseudoreplicate data matrix by randomly sampling characters from the actual data matrix until the same number of characters as in the original have been drawn. In such a pseudoreplicate sample, some characters will not be represented, and others will be drawn more than once, effectively increasing their relative weights. This new matrix is analyzed, and results are stored. Multiple resamplings are conducted, often hundreds or thousands of them. The bootstrap value for a given branch is reported as the proportion of the resulting trees in which that group occurs. This measure is sometimes construed to imply a confidence interval for the results.

Although the bootstrap has been widely applied in the phylogenetic literature, its drawbacks have just as frequently been overlooked. One limitation is that the results are negatively affected by the presence of unique characters (autapomorphies) that serve no function in forming groupings (Carpenter, 1996). The assumption of the method is that all characters are drawn from a statistically uniform distribution, but it is apparent that morphological data matrices are not constructed to be statistically uniform, and it is doubtful (and not testable) that molecular data exhibit that property either. Another problem is that clades can vary in their respective bootstrap values, even in the absence of homoplasy (Siddall, 1995:47). If a clade is unambiguously supported by one character, its bootstrap value will often be less than 60 percent, and if supported by three or more, its bootstrap will typically be 100 percent. Finally, it is easy for naïve "users" of phylogenetic trees to interpret bootstrap percentages as statistical measures of confidence ("probabilities") for the branches in question, which they plainly are not in any standard or defensible sense of the term. The bootstrap therefore tends to mislead in several different ways.

Davis (1995) demonstrated that there is a strong linear correlation between bootstrap values and Branch Support values when support is relatively modest. The linear relationship no longer holds when bootstrap values hit their maximum

of 100 percent, of course. That fact should convince even advocates of bootstrapping that Branch Support is a superior means to reflect the relative plausibility of a given branch.

Randomization Tests

Yet another proposed approach to assessing confidence in phylogenetic results involves randomizing the distribution of character states among taxa. The underlying idea is that data that appear to be phylogenetically informative might have structure that could easily be matched by chance alone. This approach, independently proposed by Archie (1989a) and Faith and Cranston (1991), reshuffles (permutes) states of a character randomly among taxa, with each character being treated independently during the course of the permutation process. Multiple permutations of the data are performed, cladograms computed, and comparisons made between the lengths of cladograms derived from randomized and original data in order to establish confidence limits, usually at the 95 percent level.

Two types of comparisons have been made: those just of lengths of the resultant trees (PTP, permutation tail probability) and those dealing with monophyletic groups (T-PTP, topology dependent permutation tail probability). Faith and Cranston (1991) claimed that permutation tests provided an "absolute criterion" by which phylogenetic hypotheses can be judged. As pointed out by Carpenter (1992), the methods provide no test of the hypotheses themselves and make the apparently unwarranted assumption that the number and frequency of character states remain constant. Faith (1992) subsequently offered a justification of his method in a hypothetico-deductive context, suggesting that "what is passed off as 'corroboration' [in cladistics] does not extend beyond identification of the mpt [most parsimonious tree], and cannot be Popperian corroboration at all." This argument was ridiculed by Farris (1995) as being a misinterpretation of the arguments of Popper and a conflation of content of hypotheses and corroboration of hypotheses. Carpenter et al. (1998) concluded that neither PTP nor T-PTP is useful in phylogenetic analysis because they can attribute significance to data that support no resolved grouping. The debate still rages (Faith and Trueman, 2001; Farris et al., 2001).

Another randomization test for assessing incongruence among data partitions was developed by Farris et al. (1994, 1995) based on the *incongruence length difference* (ILD, Mickevich and Farris, 1981). The ILD is the amount of extra homoplasy required by the combination of two data partitions in a single analysis:

$$\text{ILD} = \text{L(combined analysis)} - (\text{L(sum of analyses of partition } 1 \ldots n))$$

The Farris et al. test samples characters into random data partitions of the same size as the original partitions, and assesses the ILD value for each of them. If the ILD of the original data is significantly larger than the distribution of randomized partitions, then the data are deemed to be *incongruent.* Such a conclusion,

of course, leads the researcher back to the philosophical issues about combining versus partitioning discussed above.

Sensitivity Analysis

In analyses of DNA or RNA sequence data that exhibit complex length variation and require alignment (or direct optimization) by a computer algorithm, differences in the relative weights assigned to base pair mismatches versus gaps can result in different hypotheses of relationships among the taxa. There is no agreed upon standard set of weights for the different kinds of implied changes in the sequences, and so Wheeler (1995) has employed *sensitivity* analysis as a means to test the robustness of various clades to perturbations in the relative weighting parameters of base pair mismatches versus gaps (see also Wheeler et al., 2006). In general, if a clade appears under a broad range of different relative weights, then it is viewed as more robust than clades that come and go under different weighting schemes. See applications in Schulmeister et al. (2002), Ogden and Whiting (2003), and Laamanen et al. (2005). Not unexpectedly, the method has been a subject of philosophical debate (Grant and Kluge, 2003, 2005; Giribet and Wheeler, 2007). As we mentioned in Chapter 3, if hypotheses of homology are so ambiguous as to imply major differences in relationships of the taxa under study when alternative weighting schemes are employed, perhaps the best course of action is to seek characters that render synapomorphies that are less controversial to interpret as such (Brower and DeSalle, 1994).

Suggested Readings

Brower, A.V. Z. 2006. The how and why of branch support and partitioned branch support, with a new index to assess partition incongruence. *Cladistics* 22:378–386. [A step-by-step guide with simple heuristic examples]

Carpenter, J. M. 1988. Choosing among multiple equally most parsimonious cladograms. *Cladistics* 4:291–296. [Discussion of the application of successive approximations weighting]

DeSalle, R., and A.V. Z. Brower. 1997. Process partitions, congruence and the independence of characters: inferring relationships among closely-related Hawaiian *Drosophila* from multiple gene regions. *Systematic Biology* 46: 751–764. [Discussion of the logic, or lack thereof, of partitioning molecular data]

Goloboff, P. A. 1991. Homoplasy and the choice among cladograms. *Cladistics* 7:215–232. [Discussion of data decisiveness]

Nixon, K. C., and J. M. Carpenter. 1996. On simultaneous analysis. *Cladistics* 12:221–241. [Discussion of the total evidence approach]

SECTION III

APPLICATION OF CLADISTIC RESULTS

7

Nomenclature, Classifications, and Systematic Databases

In this chapter we will review the principles and rules governing biological nomenclature, and explore two areas that represent the most practical results of descriptive taxonomy and phylogenetic analysis—formal classifications and systematic databases.

Biological Nomenclature and Classification

Nomenclature

Antiopa, Camberwell Beauty, Kiberi-tateha, Le Morio, Mourning Cloak, Rusałka żałobnik, Sorgmantel, Suruvaippa, Trauermantel: These are some of the common names for the Holarctic butterfly species whose scientific name is *Nymphalis antiopa.* Since systematic biology is a global endeavor, it has long been evident that having a common language is a basic prerequisite to effective communication among members of the scientific community. Biological nomenclature serves as the language by which we name organisms and communicate our knowledge about them. To preserve its clarity and *stability* of meaning, this nomenclature is governed by rather elaborate and detailed rules, rooted in the system of binominal nomenclature, that have been evolving since they were first proposed in the mid-nineteenth century.

The works of Linnaeus, *Species Plantarum* (1753) and *Systema Naturae, 10th Edition* (1758), are the chosen starting points for modern biological nomenclature in most groups of plants and animals. Concomitant with the introduction of a consistent binominal system of names, Linnaeus organized knowledge of the living world in the form of a hierarchic classification. It is the fundamentals of the system of binominal nomenclature and the critical aspects of the Linnaean hierarchy that we will explore in this chapter.

Nomenclature is not an end unto itself, but rather a necessary adjunct for the organization and conveyance of information on biological diversity. Scientific

names themselves do not embody information, but they provide a common anchor point for concepts that can be found in the literature. Some scientific names and their associated concepts, like *Homo sapiens,* may be well known to the scientific and general public. Others, like *Capsus ater* or *Malus pumila,* may be meaningful only to specialists. The binominal system that was first used in a uniform way in the works of Linnaeus has persisted because of its functionality, because it is the only system that has been universally accepted, and because the entire 250-year history of biological nomenclature is based on it.

Latin was the language of systematics, as of most scholarly work, in the time of Linnaeus. Although names are not strictly required to be Latin, the codes of nomenclature (see below) have traditionally emphasized the formation of scientific names as if they were Latin or Latinized, usually from Greek. At the time of this writing Latin is still an integral element in both botanical and zoological nomenclature.

Species in Linnaeus' system are referred to by just two distinctive conjoined words, rather than by a descriptive phrase as had been the practice of many of his predecessors. Every species is placed in a genus. The names of genera are Latin nouns; the names of species are Latin adjectives in gender agreement with the nouns or, alternatively, are Latin nouns in apposition. Generic names begin with capital letters. Specific names are in lower-case, although in botany those based on proper names frequently begin with a capital. Both words are italicized. Because every species must belong to some genus, the "name" of the species is therefore a binomen, as for example:

Homo sapiens
Acacia drummondii

The individual words forming a scientific name are often referred to as the generic epithet and the specific epithet. Scientific names do not include diacritics, although they may be hyphenated in certain instances.

Every generic name (epithet) and specific name (epithet) has an author, the name(s) of the person(s) who first published them. This aspect of nomenclature probably causes more day-to-day confusion than any other. Inclusion of authors' names allows for more accurate tracing of the history of application of names. Names of similar spelling are thus often readily distinguishable from one another as referring to separate taxa, rather than as misspellings of a name for the same taxon, when the author's name is included. For example:

Rhinacloa pallipes Reuter
Rhinacloa pallidipes Maldonado

Particularly in the older literature, authors' names that are familiar to experts in a particular group are often abbreviated, sometimes in what may appear to be an idiosyncratic manner to the uninitiated. For example:

Homo sapiens L. (for Linnaeus)
Catocala ulalume Stkr. (for Herman Strecker)

Dates of authorship may also be included, to help distinguish among names and to assist in locating relevant literature:

Macrocoleus femoralis Reuter, 1879
Cyrtocapsus femoralis Reuter, 1892
Psallopsis femoralis Reuter, 1901

This information can be particularly important if a species name has been shifted from one genus to another as a result of revisionary taxonomic study. If the name of the author is in parentheses, this indicates that a species is currently placed in a genus other than the one in which it was originally described. In the botanical literature, the name of the original author of the species may be placed in parentheses followed by a second name, the latter representing a subsequent author who moved the species to its genus of current placement:

Werneckia minuta (Werneck)
Ceratozamia boliviana Brongn.
Zamia boliviana (Brongn.) A. DC.

Typically in zoological catalogs and other listings, names as used by persons other than the original author are written with the name of that person separated from the scientific name by punctuation, usually a colon, as, for example:

Phytocoris marmoratus Blanchard
Phytocoris marmoratus: Stonedahl

the latter listing indicating use of the concept by an author other than the original. This does not necessarily imply that the concept is different, however.

Codes of Nomenclature

Most early authors subsequent to Linnaeus followed the example of his now famous works and adopted a strictly binominal system of naming. Some did not, and their works are now largely rejected and forgotten with respect to the names they applied to plants and animals.

The discussions of nomenclature in this chapter deal with issues treated in the Botanical and Zoological Codes, which are the "official rule books" of nomenclature for botany and zoology, respectively. There is an International Code of Nomenclature for Cultivated Plants (2004) and an International Code of Nomenclature of Bacteria (1992), and students of those areas should consult the appropriate volumes.

Sidebar 12
Hugh Edwin Strickland (1811–1853): A Prescient Victorian Systematist

H. E. Strickland was a well-rounded naturalist, making significant empirical contributions in geology, paleontology, and systematic ornithology. He also made important contributions to theoretical systematics in two distinct areas: codification of scientific nomenclature, and the rejection of a priorism in phylogenetic hypotheses.

As mentioned elsewhere in this text, Strickland was the chair of the British Association committee (which also included a youthful Charles Darwin) responsible for publishing the first set of recommendations for rules to govern scientific nomenclature, including the principle of priority, in 1840. This contribution arose from his vociferous opposition (1837) to the disorderly proliferation of contradictory nomenclatural systems that was beginning to clutter the literature:

> No one is more desirous of the improvement of science than myself; but *reform* implies something more than *change;* and it is precisely because I do not consider that the proposed changes are *for the better,* that I enter my protest against them. On a superficial view of the case, it may certainly appear, that to change a less appropriate scientific name for one that is more so, *is* a change for the better: but what is the result? If, to take the most favorable view of the case, the scientific world should agree to adopt an "improved" nomenclature, yet, even then, all our standard works on natural history would become, in great measure, a dead letter; every museum in the world would require to be relabeled; and the disentanglement of synonyms (already a sufficiently laborious though necessary duty) would become almost hopeless. But if, as would almost certainly be the case, these "improved nomenclatures" should be only partially adopted, the disentanglement of synonyms would then become *quite* hopeless, and the curse of Babel would be entailed on the scientific world.

Strickland's quote is remarkably apt in regard to the current controversy surrounding Linnaean nomenclature and the Phylocode (see Phylogenetic Nomenclature, below).

Strickland's second important contribution was as an early advocate of viewing the pattern of relationships among organisms as an irregularly bifurcating hierarchy. In England in the 1820s and 1830s, there was a tremendous blossoming of speculation about the nature of the Natural System. A particularly vocal group led by W. S. MacLeay and including N. A. Vigors, William Swainson, and Thomas Horsfield advocated a numerologically oriented classification scheme known as the Quinarian System, based on

symmetrically nested rings of five taxa. Strickland (1841) found the Quinarian System to be artificial, and bluntly said so:

> [T]he natural system is an accumulation of facts which are to be arrived at only by a slow inductive process, similar to that by which a country is geographically surveyed. If this be true, it is evident how erroneous must be those methods which commence by assuming an a priori system, and then attempt to classify all created organisms in conformity with that system. The greater part of these arrangements are based on the assumption that organic beings have been created on a regular and symmetrical plan, to which all true classifications must conform. Some naturalists have attempted to place all animal species in a straight line, descending from man to a monad. This theory assumes that each species (excepting the two extremes) has two and only two direct affinities; one, namely, with the species it precedes, and the other with that which follows it. Others, perceiving the existence in many cases of more than two direct affinities, have assigned the most mathematical symmetry to the different parts of the system by maintaining the prevalence throughout of a constant number, such as 2, 3, 4, 5, or 7. In applying these views to facts, they have of course found numerous exceptions to the regularity of their assumed formulae, but by adducing the extermination of some species, and our ignorance of the existence of others, and by applying a Procrustean process to those groups which were either larger or smaller than the regulation standard, they have removed the most glaring objections to their theory, and have with wonderful ingenuity given their systems an appearance of truth. But when the unprejudiced naturalist attempts to apply any one of these systems to Nature, he soon perceives their inefficiency in expressing the real order of affinities. The fact is, that they all labour under the vital error of assuming that to be symmetrical, which is in an eminent degree irregular and devoid of symmetry. The Natural System may, perhaps, be most truly compared to an irregularly branching tree, or rather to an assemblage of detached trees or shrubs of various sizes and modes of growth.

Here, the shape of the Natural System as irregularly bifurcating hierarchy is plainly described as an empirical result, eighteen years prior to the publication of the *Origin of Species.* This has obvious implications for the claim of some twenty-first century systematists (e.g., Kluge, 2001) that inference of systematic relationships is not "justified" without the prior assumption of "descent, with modification."

In an ironic and gruesome tragedy of the industrial age, a 42-year-old Strickland was struck and killed by a train while hunting for fossils in a railroad embankment. What further contributions to systematics were forestalled by his untimely death?

The first formal attempt to add order to the increasing proliferation of scientific names in zoology came in 1842 with the British Association Code or Stricklandian Code, named after its author, Hugh Edwin Strickland (see Sidebar 12). The first truly international efforts in zoology involved the establishment of the International Commission on Zoological Nomenclature (ICZN), which published the *Regles Internationales de la Nomenclature Zoologique* in 1905. Since that time, the rules of zoological nomenclature have been administered and periodically modified by the ICZN. The most recent Code of Zoological Nomenclature, published in 1999, is divided into a series of articles and recommendations. "Articles" are intended to be followed strictly by those involved in the creation or modification of names, whereas "recommendations" are intended as guidelines that should be followed. The Code also contains a glossary of terms used in zoological nomenclature, a useful aid in interpreting the Code and other writings pertaining to nomenclature.

The regulation of names in botany has a history similar to that in zoology, with the adoption of a set of laws at the Paris International Botanical Congress in 1867. The *International Code of Botanical Nomenclature* was published in 1952, supplanting all prior codes and implementing a more orderly approach to the formation and regulation of names. Like the Zoological Code, the Botanical Code is divided into articles and recommendations. The most recent Code of Botanical Nomenclature was published in 2006 (The Vienna Code). Revised editions of the code appear at six-year intervals corresponding to the International Botanical Congresses. All recommendations for changes in the Botanical Code are published in *Taxon.*

According to its preamble, the Code of Zoological Nomenclature was designed with the intent of promoting "stability and universality in the scientific names of animals and to ensure that the name of each taxon is unique and distinct." The Botanical Code "aims at the provision of a stable method of naming taxonomic groups." However, stability for its own sake is not a desirable property. The names covered by the codes can be divided into the following four general groups. A name proposed in a given general group has equivalent standing and can be employed at any taxonomic level contained within that group.

Suprafamilial names. Names above the family-group level (orders, classes, etc.) are unregulated in zoology, need not be based on generic names, and do not usually have standardized endings (e.g., Aves, Ditrysia). In botany, it is recommended that such names be based on a nomenclatural type (generic name) and have standardized endings (see below).

Family-group names. This group includes all names above the level of genus-group, up to and including superfamily; the most commonly included ranks are tribe, subfamily, family, and superfamily (except for the last in botany). Names in this group have standardized endings in both botany and zoology (with eight allowed exceptions in botany for names used by Linnaeus, as, e.g., Compositae and Leguminosae) and are based on generic names (see below under the Linnaean hierarchy).

Genus-group names. This group includes generic and subgeneric names, to which the same rules apply.

Species-group names. This group includes species and subspecies names in zoology and also additional infrasubspecific names in botany, with the same rules applying at all levels.

Although the codes for zoology and botany differ in their organization, the basic tenets of the codes, stated in the form that they are found in the Zoological Code, can be outlined as follows:

1. Priority
2. Publication and availability
3. Typification
   a. Species-group types
   b. Genus-group and family-group types
4. Homonymy
5. Synonymy

Priority

The principle of priority is no less than a basic tenet of science, and according to some its application may be traced to Henry Oldenberg, the first secretary of the Royal Society. *Priority* dictates that the first name published in reference to a taxon is the name that will be used thereafter. One might ask, "What is the problem? Doesn't every taxon have just one name"? The answer is "Not necessarily." Imagine, for example, different authors working in different places, not aware of one-another's activities. Under such circumstances the same species may have been described from two to several times. Or, possibly more commonly, a given species shows great variability, which was not understood at the time of its initial discovery. The same or different authors might apply different names to the taxon, unaware that they were dealing with morphologically very different males and females of the same species, for example. The concept of priority sometimes runs afoul of nomenclatural (or nomenclatorial) stability when the oldest name is not the one that has been most widely used. Such circumstances are dealt with by the codes. The modern codes all have provisions for setting aside long-unused names, even though those names would be favored by strict application of the rule of priority. In zoology, such names may be placed on a list of "rejected" names by appeal to the International Commission of Zoological Nomenclature. Names are "conserved" in botany in deference to their long-standing usage.

As an example of applying the rule of priority:

> *Lygaeus saltitans* Fallén was published in 1807. *Chlamydatus* Curtis was described in 1833, with a new species *marginatus* Curtis. Fieber in 1858 described a new genus *Agalliastes,* including *saltitans* (Fallén), among other species. The type of *Agalliastes*

was fixed as *saltitans* by Kirkaldy in 1906. Flor synonymized *marginatus* Curtis with *saltitans* Fallén. Thus, *Chlamydatus saltitans* (Fallen) is the name that must be used on the basis of priority, and *Agalliastes* becomes an objective junior synonym of *Chlamydatus* (see synonymy, below).

For ranks above the species level, priority is important when the circumscription of groups changes—when the number of included taxa is increased or decreased. When two genera are lumped together into a single genus, the older generic name is used and the more recent name is viewed as a subjective junior synonym. For example, a recent cladistic analysis (Friç et al., 2007) showed that species of blue butterflies in the familiar Eurasian genus *Maculinea* Van Eecke 1913 form several subordinate clades of another genus with an older name, *Phengaris* Doherty 1891.

Availability

Whereas priority is a comparatively objective criterion, availability is much more nebulous (Fig. 7.1). In the context of the codes, most names would be considered "available" if they meet the following four criteria:

1. appear in a work published after 1753 for plants and 1758 for most animals;
2. meet the criteria for "publication" designated in the codes;
3. are written in the Latin alphabet (in this day and age the English alphabet); and
4. are binominal (if referring to species).

The codes also require that newly proposed names be accompanied by a description of the taxon (the text of which must be written in Latin in botany) and have a designated type (see below).

Of these four criteria, publication is the most difficult to adequately characterize. Although many works from an earlier time have presented problems with regard to satisfying the criteria of publication, no traditional printed works present the difficulties being encountered in this age of photocopying and computers. The 2006 Botanical Code requires a publication to be disseminated to botanical institutions with publicly accessible libraries as printed paper copies—"publication" online or on distributable electronic media (CD-ROM) does not constitute publication. The requirements of the 1999 Zoological Code are less stringent: a work counts as "published," no matter the medium (paper, CD-ROM), if physical copies of it are deposited in at least five major publicly accessible libraries. These rules will undoubtedly continue to evolve as the nomenclatural transition into the electronic age moves inexorably forward.

Names that are available become a permanent part of nomenclature, regardless of whether they apply to taxa recognized by modern systematists as valid or not. To help avoid subsequent confusion, the most thorough nomenclators even

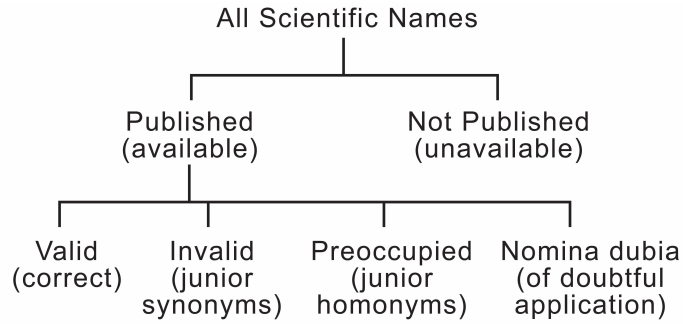

Fig. 7.1. The categories of scientific names (adapted from Blackwelder, 1967).

keep track of unavailable published names, such as infrasubspecific quadrinomina (names for entities below the level of subspecies).

Availability should not be confused with the concept of validity. *Availability* refers to the introduction of names into the literature and their acceptance—in biological nomenclature—under the set of criteria specified above. *Validity* refers to the application of those names, as is determined under rules governing the concepts of homonymy and synonymy, which are discussed below.

Typification

Whereas the concepts of priority and availability were more-or-less implicit in the works of many authors from the time of Linnaeus, such was not the case with the type concept. To early authors, the most common species was often considered "typical" of a genus. Under this approach, a landmark for fixing generic limits was often recognized, but the absence of any established or formalized approach to such fixation at times created great confusion. Species were usually represented by a number of "typical" specimens—a "type series."

The type concept was clearly stated as early as 1842 by Strickland, who observed that "We may obtain a great amount of fixity, in position at least, if not in the extent of our groups, by invariably selecting a type, to be permanently referred to as the standard of comparison." However, this approach was not formally codified in zoological nomenclature until the publication of the "Regles" (i.e., "Rules," the first Zoological Code) in 1905. The required designation of "types" produced a form of stability and order in zoological nomenclature not seen before, most particularly in the application of generic names. The mandatory designation of types in botany did not apply until January 1958. Types are of two forms: the types of species-group names are specimens, while the types of genus-group names and family-group names are species and genera, respectively. Because the type of a genus is a species, and the type of a species is a specimen, all names are ultimately tied to a particular, concrete biological entity.

Species-group types. A type in the species-group is a specimen to which a name is attached, providing an objective criterion for establishment of usage of that name. Species-group types recognized in the codes of nomenclature are called *primary types* and are of the following sorts:

- *holotype:* A single specimen (or illustration, in botany) designated by the author of the name at the time of publication of the original description.
- *neotype:* A specimen designated to replace the holotype (or other primary type) if the latter can be documented as lost or destroyed.
- *syntypes:* A group of specimens thought to represent a given species, as designated or indicated by the author(s) of the original description. These specimens are sometimes referred to as the "type series." The term "co-type" is sometimes used in the same sense.
- *lectotype:* One of the syntypes chosen by the original or a subsequent author(s) to function as the name bearer.

It is customary to deposit primary types in a recognized institution—usually a museum—dedicated to the maintenance of scientific collections. Such specimens are often given special status in museum collections because of their importance for the consistent application of names to biological entities over time.

Many other categories of so-called types will be found mentioned in the literature. In botany, probably most important among these is the *isotype,* a specimen collected from the same individual plant as the holotype.

Paratypes are commonly designated in conjunction with the description of new species, these being specimens that were studied by the author of a new species or subspecies and designated by that person at the time of publication of the original description. Although paratypes often have value to subsequent workers for reference as to how a name was applied, they have no standing in nomenclature and, as one might imagine, sometimes include misidentified specimens, as is also often the case with syntypes. Paratypes may serve as convenient potential candidates for designation as neotypes, in cases where holotypes are destroyed.

Genus-group types. These types are species, comprising names, not specimens. Classical authors generally did not designate types of genera. The modern codes require that for a generic or subgeneric name to become available, a type species must be designated by the author. For genera published before institution of requirements for mandatory designation in the codes, types are most commonly *fixed,* that is, assigned, by one of the following:

- *monotypy:* The genus in question was published with only a single included species, in which case the genus would have been *monotypic* (or *monobasic*) when made available; only the single originally included species can be the type even though other species may have been added to the genus subsequently.
- *subsequent designation:* When more than one species was originally included, the type is selected at a later time either by the original author or another person.

Family-group types. Types in this group are generic names. Family-group names are subject to the rules of homonymy (see below), in that no two can be spelled identically, even though they may be based on different, although similar generic names. Family-group names are based on generic names in Linnaean nomenclature, but not, as might be supposed, on the oldest genus name included in the group. Instead, priority of family-group names is based on the first use of a name at that rank, regardless of whether the genus name used is the oldest, or even if it is currently valid or not. A few examples may help to illustrate the point.

In the insect suborder Heteroptera, the family Velocipedidae is based on *Velocipedes,* a junior synonym of *Scotomedes.* The angiosperm genus *Winteria* is a junior synonym of *Drimys,* yet the valid family name is Winteraceae. The nymphalid butterfly genus *Callicore* Hübner [1819] is part of the tribe Catagrammini Burmeister 1878, and the name Callicorini Orfila 1952 is considered an objective junior synonym of Catagrammini, even though *Catagramma* Boisduval 1836 is a subjective junior synonym of *Callicore.*

Homonymy

The principle of *homonymy* refers to the application of the same name to different taxa. The codes state that no two names above the species-group level may be the same in either zoology or botany, although names may be duplicated between the two fields. This dictate has been applied since early on, with the greatest confusion having resulted from names with variant spellings but which nonetheless represent the same word or meaning. Currently in zoology, the rules of Latin are bent such that names that are spelled differently are treated as different even though they may be based on the same root and have the same intended meaning. The rules in botany are not so lenient: even names that are spelled rather differently but might cause confusion are excluded as illegitimate.

Homonyms may be of several types:

Senior homonym: The valid name on the basis of priority.

Junior homonym: The preoccupied name (not in use) on the basis of priority or by ruling of the bodies governing nomenclature.

Primary homonym: In the species group (species, subspecies, etc.), these are names that are the same and were proposed in the same genus-group taxon. The junior homonym must always be replaced, either by a new name or, if such exists, by a junior synonym.

Secondary homonym: If two species with the same name are placed in the same genus subsequent to their publication, they become secondary homonyms. The senior secondary homonym is the older of the two (or more) names. The most obvious difficulties in establishing secondary homonymy will be encountered if the rules of Latin are applied strictly. As an example, species that are black are often named for their coloration. The spelling of the name will vary depending on the gender of the genus: *niger* (masculine), *nigra* (feminine), *nigrum* (neuter).

If two species named for their black coloration end up in the same genus, a homonym will be formed under the strict application of the rules of Latin grammar, even though the spellings were different because the genera of original placement were of different gender. Additional complications arise from orthographically incorrect constructions such as *nigrus,* whose intended meaning was obviously "black." The rules for replacement of secondary homonyms may vary depending on dates of publication and between botany and zoology. Therefore the codes should be consulted on these issues.

The following examples will help illustrate the rule of homonymy:

- *Bougainvillia* Lesson (Coelenterata), is not a homonym of *Bougainvillea* Comm. ex Juss. (Angiospermae: Nyctaginaceae).
- *Kingia* Malloch, 1921 (Insecta: Anthomyiidae) is not a homonym of *Kingia* Brown (Angiospermae: Dasypogonaceae), but is a junior homonym of *Kingia* Theobald, 1910 (Insecta: Culicidae).
- *Mononychus* Perle, Norell, Chiappe, and Clark, 1993 (Vertebrata: Dinosauria), is a junior homonym of *Mononychus* Scheuppel, 1824 (Insecta: Coleoptera).
- *Gerris* Fabricius, 1794 (Insecta) and *Gerres* Quoy and Gaimard, 1824 (Pisces), are not homonyms, in spite of the similar spellings. The family names based on these genera are now spelled differently, Gerridae and Gerreidae, respectively, to avoid homonymy.
- *Phytocoris marmoratus* Douglas and Scott, 1869, is junior primary homonym of *Phytocoris marmoratus* Blanchard, 1852, both having been placed in the same genus at the time of their original description.
- *Phytocoris modestus* Reuter, 1908, is a junior primary homonym of *Phytocoris modestus* Blanchard, 1852, even though *modestus* Blanchard is currently placed in the genus *Polymerus.*
- *Dichrooscytus marmoratus* Van Duzee, 1910, became a junior secondary homonym of *Phytocoris marmoratus* Blanchard, 1852, on the basis of priority, when it was transferred into *Phytocoris.*

Synonymy

The concept of synonymy in nomenclature deals with the application of different names to the same taxon. As is the case with homonyms, synonyms can be of several types.

Senior synonyms. The senior name is one of two or more different names that is deemed valid, usually on the basis of priority or because of its choice by the first reviser (in zoology), or by a ruling of the bodies governing nomenclature.

Junior synonyms. The junior name(s) is the one deemed to be invalid, usually on the basis of priority, or because of its choice by the first reviser, or by a ruling of the bodies governing nomenclature. Junior synonyms are available names in nomenclature, even though they are not considered valid as the name of a recognized taxon. It is therefore important to understand the distinction between availability and validity.

Objective synonyms. These are different names that by examination of nomenclature alone can be judged to refer to the same taxon. For example, any two family-group names with the same type genus, or any two genera with the same type species, are objective synonyms; two species based on the same type specimen would also be objective synonyms. Because of their clear-cut nature, objective synonyms usually are created only by inadvertent error. For example:

> *Saprophilus* Steubel, 1939, is a junior objective synonym of *Creophilus* Leach, 1819, both being based on the same type species, *Staphylinus maxillosus* Linnaeus, 1758.
>
> It is possible for an objective junior synonym to become the valid name of a species if its senior synonym becomes a junior homonym of another name due to amalgamation of species with the same specific epithet into a single genus.

Subjective synonyms. These are different names whose application to the same taxon is determined by systematists applying different taxonomies (circumscriptions). For example, two nominal species originally described as distinct but later treated as being identical are subjective synonyms. This type of synonymy is common, and in some complex cases the subject of great confusion.

> *Demarata* Distant, 1884, is a junior subjective synonym of *Ceratocapsus* Reuter, 1876, because the type species of *Demarata, D. villosa* Distant was judged, subsequent to its description, to belong to *Ceratocapsus.*

Subjective synonymy is one of the chief sources of nomenclatural instability due to disagreement among systematists about the *circumscription* of taxa. Those systematists who prefer to recognize many separate taxa with few included members in each are sometime referred to as "splitters," while those who prefer fewer, more inclusive taxa are called "lumpers." For example, the genus name *Speyeria* has been used for North American argynnine butterflies, while the names *Argynnis, Argyronome, Childrena, Damora, Fabriciana, Mesoacidalia, Nephargynnis,* and *Pandoriana* have been used for Eurasian members of the same group. Recent work by Simonsen (2006) argues that all the species in these nine genera should be viewed as members of the genus *Argynnis.* Simonsen's circumscription is empirically well supported but will undoubtedly not sit well with the authors and users of the many American and European butterfly guides whose taxonomy his work has rendered obsolete. The Codes of Nomenclature make no recommendations about such decisions.

The Linnaean Hierarchy

The Linnaean hierarchy (Fig. 7.2) is a system in which the names associated with the nested levels in the classification denote rank. The same result could be achieved through a system of indentation, the degree of indentation denoting rank in the hierarchy. Indentation requires a visual presentation in order to understand

I. COLEOPTERA.

Elytra alas tegentia.

170. SCARABÆUS. *Antennæ* clavatæ capitulo fissili.
Tibiæ anticæ sæpius dentatæ.

* *Thorace cornuto.*

Hercules. 1. S. thoracis cornu incurvo maximo subtus barbato, capitis cornu recurvato: supra dentato.
Marcgr. bras. 247. *f.* 3. *Jonst. inf. t.* 16. *f.* 1.
Olear. mus. t. 16. *f.* 1. *Pet. gaz. t.* 70. *f.* 1.
Grew. mus. 162. *Swamm. bibl. t.* 30. *f.* 2.
Rœs. scarab. 1. *t. A. f.* 1. *ins.* 4. *p.* 45. *t.* 5. *f.* 3.
Habitat in America.

Actæon. 2. S. thorace bicorni, capitis cornu tridentato: apice bifido. *Mus. L. U.*
Marcgr. bras. 246. Enena. *Olear. mus. t.* 16. *f.* 2.
Mer. sur. t. 72. *Rœs. scar.* 1. *t. A. f.* 2.
Hoffn. pict. 1. *t.* 1. *in medio.* *Swamm. bibl. t.* 30. *f.* 4.
Habitat in America.

Simson. 3. S. thorace bicorni, capitis cornu apice tantum bifurcato.
Sloan. jam. 2. *p.* 205. *t.* 237. *f.* 4. 5.
Brown. jam. 428. *t.* 43. *f.* 6. Scarabæus 4.
Habitat in America.

Atlas. 4. S. thorace tricorni: antico brevissimo, capitis cornu recurvato. *M. L. U.*
Marcgr. bras. 247. *f.* 1. *Olear. mus. t.* 16. *f.* 3.
Pet. gaz. t. 49. *f.* 8. *an t.* 14. *f.* 12.
Merian. surin. in titulo F. G. *Swamm. bibl. t.* 30. *f.* 3.
Habitat in America.

Aloëus. 5. S. thorace tricorni: intermedio longiore, capite muticco, elytris unistriatis. *M. L. U.*
Rœs. ins. 2. *scar.* 1. *t. A. f.* 6. *Pet. gaz. t.* 24. *f.* 10.

Y 5 *Habi-*

Scarabæorum *Larvæ vivunt tranquillæ sub terra; harum pleraque fimo delectantur & eo pascuntur.*

Fig. 7.2. The Linnaean hierarchy as portrayed by a page from the *Systema Naturae,* including the ranks of Class (Insecta), Order (Coleoptera), Genus (*Scarabaeus*), and species (*Hercules* and so on) (Linnaeus, 1758).

rank. In the Linnaean system one need only remember the rank order of the names used to define the hierarchy. A more or less universally agreed-on rule of Linnaean nomenclature is that no taxon should contain subordinate taxa of an equal or higher rank, but this rule is often bent to accommodate asymmetrical, pectinate groups above the level of families. For example, the Class Aves is sister group to a clade of saurischian dinosaurs, which presents a problem if one wants to recognize Dinosauria as an Order.

Because he never imagined that his system would one day accommodate millions of species, Linnaeus employed a limited number of levels (ranks), but his system nonetheless reflected the nesting of groups within groups. The systematic hierarchy in the tenth edition of the *Systema Naturae* (1758) included:

- Kingdom
  - Class
    - Order
      - Genus
        - Species
          - Variety

As knowledge of biological diversity increased, later authors incorporated more categories above and below the level of order. McKenna and Bell (1997) discussed this issue at length with respect to the Mammalia, and probably incorporated as many levels as does any existing, formal, modern classification. Today it is common to see ten or more levels in both botany and zoology.

- Kingdom
  - Phylum
    - Class
      - Subclass
        - Order
          - Suborder
            - Superfamily (primarily in zoology)
              - Family
                - Subfamily
                - Tribe
                - Subtribe
                - Genus
                - Species

Botany adds the subgeneric ranks of Section and Series, and the subspecific ranks of Variety and Form. Zoological nomenclature recognizes the use of trinominal designations for subspecies, following the rules for species-group names, but infrasubspecific names are not recognized by the Zoological Code.

To facilitate the determination of rank of the family-group level (names from superfamily to subtribe), the names bear unique suffixes in zoological and botanical nomenclature, as follows:

Rank	*Zoology*	*Botany*
Phylum or Division	—	-phyta
		-mycota (fungi)
Subphylum or Subdivision	—	-phytina
		-mycotina (fungi)
Class	—	-phycae (algae);
		-mycetes (fungi);
		-opsida (other groups)
Subclass	—	-phycidae (algae)
		-mycetidae (fungi)
		-idae (other groups)
Order	—	-ales
Suborder	—	-ineae
Superfamily	-oidea	—
Family	-idae	-aceae
Subfamily	-inae	-oideae
Tribe	-ini	-eae
Subtribe	-ina	-inae

Formal Classifications

We have now outlined the terminology and structure of biological nomenclature as they currently exist, which tell us how to use names correctly. As noted above, however, the Codes deliberately avoid any rules or recommendations pertaining to composition of taxa or their arrangement in relation to one another. To address this fundamental task of systematics, we need to revisit the aims and principles discussed in earlier chapters.

Arguments for Cladistic Classifications

Chapters 3 through 6 of this book dealt with methods and approaches for evaluating characters and bringing them to bear as evidence for phylogenetic inference. As we discussed in Chapter 1, systematists have believed since the time of Darwin that descent with modification provides the "hidden bond" that explains the natural system. At the same time, the empiricist philosophical tradition (Mill, 1843; Gilmour, 1940) held that "natural" classifications should summarize character information most efficiently. Hennig argued that there should be a direct correspondence (isomorphy) between a formal classification and the underlying pattern of phylogenetic diversification, as closely as it may be inferred by

empirical methods. Pheneticists argued that since the true course of phylogeny is unknowable, the character data alone should be considered in building "natural" classifications.

The necessity for the correspondence between natural classifications and Hennigian character transformation-based phylogenetic trees was demonstrated by Farris (1979) on the basis of efficiency of diagnoses. Farris emphasized that a salient feature of a hierarchy is the impossibility that every group be most informative for every feature considered because some groups are subsets of other groups. Farris proved formally that in this regard, the most-parsimonious trees: (1) allow all data to be summarized in the most succinct diagnoses of clades; (2) minimize exceptions to such diagnoses (instances of homoplasy); and (3) permit the greatest number of predictions about character-state distributions between adjacent taxa. Such conclusions correspond closely to Hennig's ideas concerning the role of classifications as the general reference system for biology.

The following example illustrates the points made by Hennig and Farris. Consider the traditional classification of the Insecta:

- Insecta
  - Entognatha
  - Ectognatha
    - Apterygota
      - Machilida (Archaeognatha)
      - Thysanura (Zygentoma)
    - Pterygota
      - Odonata
      - Ephemeroptera
      - Neoptera

The Machilida and Thysanura were long grouped together because they lack wings but nonetheless share many features not found in the more primitive entognathous insects. However, the mandibles in Machilida have a single point of articulation, while the Thysanura share with all winged insects the dicondylar structure of the mandibles. This synapomorphy is recognized in the following classification:

- Insecta
  - Entognatha
  - Ectognatha
    - Machilida (Archaeognatha)
    - Dicondylia
      - Thysanura (Zygentoma)
      - Pterygota
        - Odonata
        - Ephemeroptera
        - Neoptera

In this scheme the Thysanura are not grouped with the Machilida as members of "Apterygota" but rather are the sister-group of all other insects on the basis of mandibular articulation and other distinctive features. Although the first classification would seem to convey information on similarity more effectively because the wingless insects are grouped together, that notion is simply an illusion. Grouping on the complementary absence of distinctive characters allows for any grouping. For example, the absence of insect wings as a group-defining character could group Machilida and Thysanura with any other organism except winged insects, such as Collembola, oak trees, and bacteria. Such groupings would require that all characteristics of all groupings be completely enumerated in order to recognize them, an obviously inefficient system. Grouping on the basis of synapomorphy (parsimony) produces the most efficient hierarchic representation of the data because the repetition of attributes is minimized.

Arguments against Cladistic Classifications

Even though we have seen that parsimony produces the most efficient representation of data on which classifications could be based, we might nonetheless wish to examine arguments that have been brought forward against cladograms as the basis of biological classifications and against the application of parsimony more generally.

For many years, the most frequently heard objections to cladistic classifications were those of the "classical evolutionary taxonomists" (e.g., Mayr, 1974; Ashlock, 1979), who argued that

1. the cladistic approach would require the reranking of many familiar taxa;
2. there would be too many hierarchical ranks; and
3. under Hennig's *monophyly* concept, cladistic classification schemes would discard information on similarity, an important aspect of evolution.

The pheneticists argued that

1. information on similarity would be discarded;
2. the cladistic approach would not produce true classifications because it is not based on an ultrametric (see Sidebar 8 for further discussion of metrics);
3. there would be too many levels in the classification; and
4. the cladistic classifications are generally not symmetrical, with unequal numbers of taxa in sister clades, and therefore defective.

Let us examine the substance of these complaints.

Objections to assigning new ranks to familiar taxa may have their deepest roots in the traditions of taxonomy. Yet, if rank is to connote relationship, objecting to changes in ranks that incorrectly portray relationships would seem to be scientifically counterproductive. This point was made by Gaffney (1979a), who

concluded that a perfectly stable classification could represent only the perpetuation of ignorance. If systematists did not modify their classifications in light of new taxonomic data, all butterflies would still be in the Linnaean genus *Papilio* (they now comprise two superfamilies), and the chimpanzee would still be in the genus *Homo*.

Since cladistic classifications are based on special similarity (synapomorphy), "discarding information on similarity" is really an argument that groups based on symplesiomorphies or combinations of synapomorphies and symplesiomorphies should be retained. As we discussed above in the "Apterygota" example, such groups are artificial, arbitrary, and lack predictive value.

The cladistic approach, reflecting the irregularly bifurcating hierarchy of the natural system, does result in a proliferation of ranks in the Linnaean hierarchy compared with artificially tidy systems. However, reranking has largely disappeared as an issue because even the most ardent supporters of Hennig's original mandate concerning ranking realized that producing a single unified hierarchy for all of life would involve so many ranks as to be unfeasible. The simple solution to this problem is to not assign a name and rank to every node. Hennig (1969) himself apparently recognized the difficulty of creating one very large classification with a consistent set of naming conventions, and consequently adopted a numbering system in his classification of the Insecta, a portion of which is shown in Fig. 7.3.

The idea that a classification must be ultrametric could be dismissed as purely definitional, but other arguments are available. Farris (1979) showed that it is impossible for a clustering-level distance (ultrametric) to fit distance data better that the best-fitting path-length distance (see Sidebar 8). Thus, the most parsimonious path-length interpretation will always produce the most efficient hierarchic description of the data. The fact that phenetic methods are based on clustering levels (ultrametrics) does not ipso facto mean that such methods always portray information most efficiently in a hierarchic system. In fact, the conclusion is false.

The two remaining arguments of the pheneticists have an empirical relationship to one another. Whether a classification is phenetic or cladistic in origin, given the same topological relationships of the taxa, the numbers of levels will be the same, a point made by Farris (1979), and certainly one widely appreciated outside phenetic circles. However, if the symmetry of the classification is changed, then the numbers of levels may change. Whether one approach to classification produces results that are more consistently symmetrical than another would seem to be irrelevant for judging a method (see Sidebar 10), unless the goal of the method was none other than to minimize the number of hierarchic levels. Such a goal has not been claimed a priori for any approach to classification in modern times, and its use as a criticism of cladistic results can hardly be taken seriously.

Observation reveals, nonetheless, that the results of cladistic analyses often do show pronounced asymmetries—what are frequently referred to as *pectinate* or *comblike* cladograms. As we have discussed throughout this book, cladistic

1. Entognatha
    1.1. Diplura
    1.2. Ellipura
    1.2.1. Protura
    1.2.2. Collembola
2. Ectognatha
    2.1. Archaeognatha (Microcoryphia)
    2.2. Dicondylia
    2.2.1. Zygentoma
    2.2.2. Pterygota
    2.2.2.1. Palaeoptera
    2.2.2.1..1. Ephemeroptera
    2.2.2.1..2. Odonata
    2.2.2.2. Neoptera
    2.2.2.2..1. Plecoptera
    2.2.2.2..2. Paurometabola
    2.2.2.2..2.1. Embioptera
    2.2.2.2..2.2. Orthopteromorpha
    2.2.2.2..2.2..1. Blattopteriformia
    2.2.2.2..2.2..1.1. Notoptera
    2.2.2.2..2.2..1.2. Dermaptera
    2.2.2.2..2.2..1.3. Blattopteroidea
    2.2.2.2..2.2..1.3.1. Mantodea
    2.2.2.2..2.2..1.3.2. Blattodea
    2.2.2.2..2.2..2. Orthopteroidea
    2.2.2.2..2.2..2.1. Ensifera
    2.2.2.2..2.2..2.2. Caelifera
    2.2.2.2..2.2..2.3. Phasmatodea
    2.2.2.2..3. Paraneoptera
    2.2.2.2..3.1. Zoraptera
    2.2.2.2..3.2. Acercaria
    2.2.2.2..3.2..1. Psocodea
    2.2.2.2..3.2..2. Condylognatha
    2.2.2.2..3.2..2.2. Thysanoptera
    2.2.2.2..3.2..2.2. Hemiptera
    2.2.2.2..3.2..2.2.1. Heteropteroidea
    2.2.2.2..3.2..2.2.1.1. Coleorrhyncha
    2.2.2.2..3.2..2.2.1.2. Heteroptera
    2.2.2.2..3.2..2.2.2. Sternorrhyncha
    2.2.2.2..3.2..2.2.2.1. Aphidomorpha
    2.2.2.2..3.2..2.2.2.1.2. Aphidina
    2.2.2.2..3.2..2.2.2.1.2. Coccina
    2.2.2.2..3.2..2.2.2.2. Psyllomorpha
    2.2.2.2..3.2..2.2.2.2.1. Aleyrodina
    2.2.2.2..3.2..2.2.2.2.2. Psyllina
    2.2.2.2..3.2..2.2.3. Auchenorrhyncha
    2.2.2.2..3.2..2.2.3.1. Fulgoriformes
    2.2.2.2..3.2..2.2.3.2. Cicadiformes
    2.2.2.2.4. Holometabola

Fig. 7.3. Sample of the numbered hierarchic classification of the Insecta (excluding Holometabola) from *Die Stammesgeschichte der Insekten* (Hennig, 1969).

classifications, pectinate or otherwise, result from applying methods designed to best describe all available data. Thus, the topological form of the hierarchy in no way undermines the informativeness of the classification, and cladistic methods do not favor one topological form over another.

If there is a general conclusion to be drawn from 50 years of methodological discussion about biological classification, it is the erroneous nature of the assumption that grouping by overall similarity will provide a more efficient description of information on genealogical relationships than does grouping by synapomorphy. The issue of whether classifications containing only monophyletic groups discard information on similarity, as claimed by both pheneticists and evolutionary taxonomists, would seem to have been unequivocally resolved.

By themselves, classifications contain hypotheses about group relationships, which allow us to make predictions concerning the distribution of features unique to the contained taxa (Platnick, 1978). But, as has been repeatedly emphasized, the hierarchic representation of taxonomic relationships does not by itself transmit the information on which the classification is based. That information is in the diagnoses. It is those diagnoses, which are derived through the application of parsimony, that describe most efficiently the genealogical relationships, while at the same time conveying as efficiently as possible the information on divergence (e.g., Farris, 1979).

Converting Cladograms to Linnaean Hierarchies

Two approaches have been proposed for converting cladograms into formal classifications. These are *subordination* and *sequencing.* The former approach was advocated by Hennig; the latter approach was apparently first codified by Nelson (1974). The results of applying these two approaches are summarized in Fig. 7.4.

Subordination. This approach requires that each branching level in a cladogram receive a distinctive hierarchic designation. Subordination requires the maximum number of ranks in the Linnaean presentation of the classification, but allows for exact retrieval of the branching pattern without recourse to an additional set of conventions.

Sequencing. This approach allows progressively nested sister-group relationships to be of equal rank, thereby requiring fewer levels, particularly in rendering a pectinate scheme. However, sequencing necessitates knowing the convention by which the Linnaean scheme was rendered in order to retrieve the branching pattern exactly. As shown by Wiley (1979), with enough conventions, any group can be classified or reclassified, without a proliferation of ranks. But those conventions must be recorded and remembered.

Classifying Fossils and Taxa of Uncertain Position. The issue of fossil taxa and cladistics was at one time a subject of impassioned debate, primarily because of the traditional paleontological view that fossils might actually represent the ancestors of Recent taxa. We have noted in Chapter 4 that there seems to be no way to test theories of ancestor-descendant relationships in a cladistic framework, for

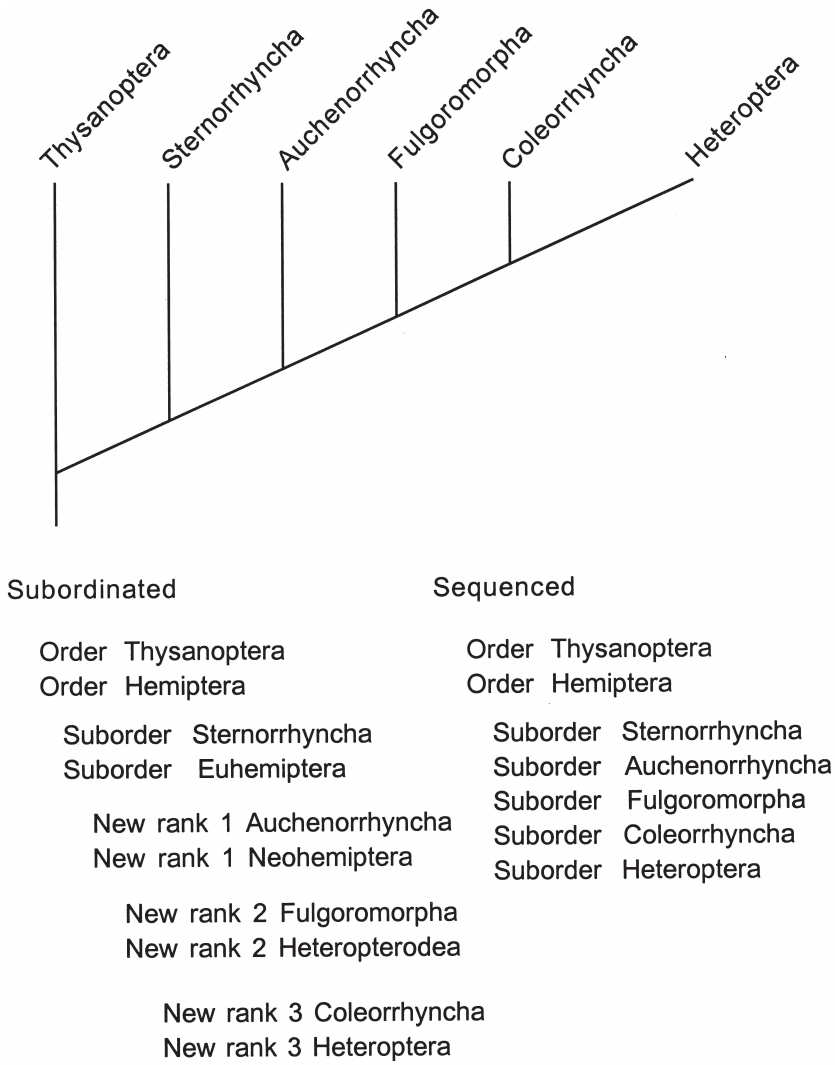

Fig. 7.4. Examples of sequenced and subordinated classifications of the Hemiptera (scale insects, cicadas, true bugs, and so on).

several reasons. First, the admission of ancestors to the system would allow group recognition based on the absence of characters. Second, as noted by Farris (1976), there is no obvious way to represent ancestor-descendant relationships in a formal hierarchic classification. We might then conclude that all groups—fossil and Recent—should be treated as terminal taxa and that "The main problem of classifying fossils is not the accommodation of 'ancestral groups,' but rather groups of uncertain relationship" (Nelson, 1972:230). Having arrived at this conclusion, the

same methods can be used for dealing with all *incertae sedis* taxa—that is, those of uncertain position—irrespective of whether those taxa are Recent or fossil.

Taxa of uncertain position often attain that distinction because they are incomplete and therefore not able to be scored for some critical characters, as is the case with many fossil specimens. In a cladogram, such taxa often form part of a trichotomy or polytomy, being related to other taxa only at the level that the available character information allows. A practical approach was advocated by Nelson (1972), whereby fossil groups to which no Recent members are assigned are preceded by a dagger. Taxa of uncertain position are placed at the level at which their relationships can be positively determined and labeled as *incertae sedis.* The following example will illustrate the point:

Class A
  Order A
  †Species A (*incertae sedis*)
    Family A
    Genus A
      Species B
      Species C
  Order B
    Family B
    Species D (*incertae sedis*)
      Genus B
        Species E
        Species F

Species A (a fossil) can be placed with certainty only at the level of order, whereas species D can be placed with certainty only at the level of family. The species B, C, E, and F have sufficient information to place them at the generic level. Further discussion of the classification of fossil taxa can be found in the works of Farris (1976b), Patterson and Rosen (1977), and Wiley (1979).

Stem groups and crown groups. The proposals outlined above allow for the placement of both fossil and Recent taxa in a phylogenetic context. Nonetheless, the apparent desire to understand the "evolutionary history" of fossils has led to proposals that would seem to contradict the core principles of phylogenetics, namely the recognition of Recent *crown groups* (clades of extant taxa; monophyletic groups), and more particularly their complementary paraphyletic fossil *stem groups* (Jefferies, 1979; see also Ax, 1985). Paradoxically, the foundations for much of this thinking are attributed to the works of Hennig (1969; 1981) and his attempts to understand phylogenetic relationships within the Insecta.

The current motivation for using the crown group–stem group terminology seems to be multiple. First, many fossil taxa are fragmentary and lack the defining attributes of groups based on morphologically complete Recent taxa. Second, irrespective of quality of preservation, extinct lineages frequently outnumber extant

lineages, and their recognition as distinct at higher taxonomic levels can lead to a proliferation of categorical ranks, as is well illustrated by the work of McKenna and Bell (1997) on the classification of the mammals, many lineages of which are known only as fossils. Third, in the minds of at least some authors, the absence of character information in fossils suggests their potential status as ancestral to Recent taxa.

Although reference to crown and stem groups has grown dramatically in the last 20 years (Donoghue, 2005), their usage has been restricted almost exclusively to the paleontological literature and to efforts to define names in "phylogenetic nomenclature" (see below). Stem groups are nearly always paraphyletic and therefore not groups at all in a phylogenetic context. The concept is thus of dubious utility and should probably be abandoned to avoid confusion.

Conclusions. If a consensus has been reached on how to faithfully represent the results of phylogenetic analysis in formal classifications, it would seem to embody the following points:

1. Only monophyletic groups should be named.
2. Named groups should be those that need to be recognized by name (i.e., empty ranks need not be named). A good example might be the Machilida, discussed earlier in this chapter. As the sister group of all other ectognathous insects, eight ranks would be required to produce a portrayal of ranks for approximately 300 species of bristletails equivalent to that required to deal with the 1 million remaining species of ectognathous insects, namely: Dicondylia, Pterygota, Paleoptera, Paurometabola, Paraneoptera, Acercaria, Condylognatha, and Order. In fact the levels most commonly used are Subclass Archaeognatha and Order Machilida.
3. Traditional rankings may be retained (e.g., Class Aves and Class Insecta) with an implicit adoption of the sequencing convention. Hierarchic relationships are established through the naming and (sometimes) ranking of necessary inclusive groupings. The insect orders represent one of the best examples of this practice. Some of the currently recognized groupings were established by Linnaeus and have been used at the same rank level ever since. Phylogenetic studies have revealed, however, that not all insect orders merit equal rank in a phylogenetic system, as can be seen in the classification of Hennig (see Fig. 7.3). However, through the use of approximately eight ranks above the level of order, the hierarchic relationships of the major insect groups can be portrayed, while at the same time retaining the traditionally recognized orders.

It is worth noting at this juncture that even though classification and phylogeny are viewed as having an inextricable relationship, many published classifications of living organisms are not based on explicit phylogenetic hypotheses. Thus, much of the discussion in this book describes a goal rather than an achieved result. The desirability of basing classifications on phylogenetic analyses is widely recognized. Our ability to achieve this goal is, however, severely limited by a variety

of factors, including (1) the limited number of practicing systematists; (2) the limited time span during which appropriate methods have been rigorously applied; and (3) the reality of not yet having, for many groups, data capable of answering questions about detailed relationships among organisms.

Criticisms of the Linnaean System

Criticisms of the Linnaean hierarchy, as embodied in the codes of nomenclature, can be divided into two general categories. Both address the issue of *stability,* a caveat of the Codes.

First is modification of names themselves, irrespective of the taxonomic concepts attached to them. The most obvious example is the creation of a *new combination.* When a species is transferred from one genus to another and the gender of the generic names is different, if the specific name is an adjective, its ending must be changed to maintain gender agreement (in Latin, nouns can be masculine, feminine, or neuter in gender). For example:

> *Dichrooscytus speciosus* Van Duzee (a masculine genus name) became *Bolteria speciosa* (Van Duzee) in order to maintain gender agreement upon its transfer to Bolteria (apparently a feminine genus name).

Gender agreement has been a particular irritant to zoologists, where versions of the code prior to 1999 dictated the gender of many generic names, irrespective of the gender implied in their usage by the original author. The result has been that some "authorities" on nomenclature have modified many specific names for no other reason than to achieve apparent agreement between the gender of the genus—as determined by the code—and all of its included species. See Turner (1967) for an entertaining critique of this practice.

The requirement of gender agreement is an impediment to stability of species-group names that could be removed by not requiring agreement between generic nouns and specific adjectives. Such an approach would require deciding whether species should adopt their original termination or their current termination; the principle of priority would be served by the former. The consistent spelling of names has particular advantages for use of computer databases, which are powerful tools for the organization and management of information in biological systematics.

One might therefore expect adherence to the rules of Latin grammar to come under more pressure for change. But, in the 1999 revision of the Zoological Code, gender agreement was maintained despite efforts to remove its application when new combinations are created. One way to avoid the gender agreement issue with new species names is to designate them as "nouns in apposition," which have a gender of their own and always retain their original spelling no matter what generic name they are attached to. It should be pointed out that the availability of names

is unaffected by the fact that in their original form they do not have correct Latin orthography. In such cases, bastard names have usually been treated as if they were simply an arbitrary combination of letters, a legitimate approach under the Zoological Code. As an example, we might point once again to the erroneous use of *nigrus* as the masculine form for reference to species that are black in color.

Second, and less subject to objective resolution, is the issue of the systematic concepts attached to names. Typification brought a sense of order to nomenclature that had not been achieved previously, this "transition" occurring earlier in zoology than in botany. Yet, it poses what some systematists have viewed as problems with no obvious or universally acceptable solution, especially in light of the long nomenclatural history with which biologists must contend.

At the simplest level, consider type specimens. A poorly chosen specimen for a given species may leave the identity of the taxon in permanent doubt. For example, a female holotype in a genus in which species identification is based on details of male genitalia may render comparisons between this and other species moot, if positively associated males of the female-based species cannot be found. Old, badly damaged holotypes can also be a source of ambiguity. Nonetheless, in the vast majority of cases, the existence of type specimens—in combination with well-prepared printed descriptions and figures—has greatly facilitated the uniform application of species-group names. Safeguarding type specimens in perpetuity as the anchors of biological nomenclature is one of the critical functions of museum collections.

All supraspecific categories have "nomenclatural" types. In the case of genera, a "poorly chosen" type species can cause problems with generic circumscription. In the example above, if the designated female holotype pertains to the type species of the genus, the issue of generic relationships may be complicated or unresolvable.

Another potential drawback of typification is sometimes manifested in groups with histories that predate the establishment of the Codes. When, upon revision or other critical examination, two long-used and well-known generic names are found to be synonymous because their type species are deemed to be congeneric, one of the generic names will be treated as invalid under the rule of priority. Such a situation would be of no import to a computer, but it has proved vexing for taxonomists and other biologists who attach particular concepts to certain names. The last line of recourse is to petition to the international commissions for conservation of the name whose concept is more widely understood, thus setting aside the rule of priority.

If fixed types were removed from the equation, concepts could probably be made more stable by changing the type of a supraspecific taxon—from time to time—to improve conceptual agreement. This would, however, leave the field wide open for changes based on the personal choice of investigators with competing theories of generic limits and relationships (the lumpers and splitters). The choices could range from placing all species in a single genus, on one extreme, to describing a unique genus for each species, on the other—the same dire circumstances Strickland sought to avoid!

Thus, the issue boils down to whether priority and typification are the best possible solutions for maintaining a universal system of names in a situation which, under any circumstances, will always involve some compromise. At least two alternative approaches have been proposed. First was *uninominal nomenclature* (Michener, 1963). The idea, designed to do nothing more than promote stability of names, received little attention at the time of its introduction into the literature and now seems to have disappeared completely from consideration. A more recent, related proposal—*phylogenetic nomenclature*—has been the subject of considerable controversy in the systematic literature over the past 15 years.

Phylogenetic Nomenclature

Starting in the late 1980s, a small group of systematists proposed that the Linnaean hierarchy should be scrapped in favor of a rankless "phylogenetic taxonomy," or what is better termed *phylogenetic nomenclature.* Their arguments are founded on the ideas (introduced in Chapter 2) that Linnaean nomenclature is based on the incorrect ontological perspective that species are classes, rather than individuals, and that Linnaean ranks thus represent an undesirable holdover of Aristotelian essentialism (Rowe, 1987; de Queiroz, 1988; de Queiroz and Gauthier, 1990). These claims derive from a certain philosophical viewpoint (e.g., Hull, 1965; Ghiselin, 1966), and can be viewed as resting largely upon a restrictive meaning of the term "definition" as denoting an "essence," with no consideration of how the meaning attached to that term may have changed over the past 2000 years or how it is employed by practicing taxonomists.

Because they are ontologically committed to taxa as things that exist in the world, irrespective of systematic knowledge of their attributes, the advocates of phylogenetic taxonomy believe that taxa should be defined exclusively in terms of common ancestry, rather than according to their attributes. For example:

> Lepidosauria is defined as *Sphenodon* and squamates and all saurians sharing a more recent common ancestor with them than with crocodiles and birds.

This definition (more aptly, circumscription) includes not only extant taxa and known fossil taxa but also hypothetical entities. According to de Queiroz and Gauthier (1990), defining taxa this way allows evolutionary considerations to enter directly into taxonomic definitions rather than assessing them after the fact, which they view as good. Phylogenetic definitions of taxa would—in the view of its proponents—clarify the distinction between *definition* and *diagnosis.* Definitions of taxon names would become ontological statements referring to groups that are presumed to exist under the central tenet of common descent, independent of our ability to recognize them, while diagnoses would retain their standard meaning as a list of features differentiating a taxon from others. Furthermore, according to de Queiroz and Gauthier (1990:313), taxa recognized in their "phylogenetic

taxonomic system" would not be concepts, but real things—systems deriving their existence from common ancestry relationships among their parts.

The issue of taxonomic "reality" can easily be questioned, however, by considering the case of a group whose topology has been altered as a result of revised phylogenetic analysis. Advocates of phylogenetic nomenclature make little mention of this point, perhaps assuming that concepts of relationship will be obvious and neither questioned nor revised. Yet in actual practice, the "real" groups defined in phylogenetic nomenclature derive their recognition from phylogenetic analyses based on attributes thought to be diagnostic for the groups. Thus, a basic logical conflict persists in all presentations of the phylogenetic-taxonomic approach, despite the lengthy and impassioned disquisitions of its proponents. As we have noted elsewhere, the "reality" of taxonomic groupings is not a self-evident property. It is, rather, the result of analysis and synthesis of observation. Those observations are represented by nothing more nor less than the attributes (characters) of the organisms themselves. That property, central to our attempts to acquire knowledge of genealogical relationships among organisms, will not disappear through appeals to "evolutionary considerations" by advocates of phylogenetic nomenclature. Taxa and their circumscriptions remain hypotheses, while traditional nomenclature is anchored to individual specimens by typification. We note with some amusement that animal names defined on the basis of ancestry are excluded from zoological nomenclature under the Zoological Code because the Code expressly forbids (under Art. 1.3.1) the naming of hypothetical concepts. We would further observe that phylogenetic nomenclature commingles names of taxa with taxonomic concepts, an approach that is expressly forbidden by the existing codes of nomenclature.

The claim that phylogenetic nomenclature will provide a more stable basis for our taxonomic concepts of higher taxa was addressed by Dominguez and Wheeler (1997). They pointed out that information on hierarchic relationships implicit in the ranked Linnaean system would be lost in the rankless system of de Queiroz and Gauthier. They further observed that as hypotheses of relationships are revised, taxa named under the system of de Queiroz and Gauthier can change their level of generality radically, from being part of a group to including that same group. Thus, while the names remain stable as words their referents can change dramatically. Nevertheless, a group of advocates has produced a "Phylocode" (Cantino and de Queiroz, 2003–2007) intended to supplant the Zoological and Botanical Codes of nomenclature by establishing a parallel system of names. This effort has met with a barrage of criticisms by other systematists of its underlying philosophy and practical implications (Nixon and Carpenter, 2000; Carpenter, 2003; Keller et al., 2003; Nixon, 2003; Schuh, 2003; Barkley et al., 2004; Rieppel, 2006b). Despite all its advocates' Sturm und Drang over the past 20 years, phylogenetic nomenclature seems to have had a minimal impact on the ongoing practice of naming taxa. Finally, we observe that if the desideratum is nomenclatural stability, then perhaps tossing out 250 years of systematic literature and making up an entirely new nomenclature is not the best way to achieve that goal.

Aids to the Use of Nomenclature

Finding and applying names correctly in biology requires some well-organized aids. Under the currently accepted codes on nomenclature, these differ between botany and zoology, and we will therefore discuss them separately.

Zoology

The International Commission on Zoological Nomenclature maintains a Web site that contains links to three essential taxonomic tools. First is the Zoological Code, which has undergone several revisions, the most recent published in 1999 (some modifications to expand and refine methods of publication have lately been proposed [ICZN, 2008]). For any working taxonomist, access to the most recent Code is indispensable, and the ICZN is to be commended for posting an easy-to-navigate version of the current Code on the Web. Second, the ICZN now publishes the *Bulletin of Zoological Nomenclature* on-line, in which petitions to and decisions of the Commission appear. Petitions include proposals for setting aside the rule of priority in order to suppress long unused names in favor of more recently published names that have been widely used and accepted by the scientific community. The Commission might also be asked to decide which of two homonymous family names should remain unchanged and which should be replaced. The third resource available from the ICZN Web site is ZooBank, a prototype world register of animal names, which ultimately will replace prior published efforts.

The *Zoological Record* prepares a listing of many of the generic (and subgeneric) names newly published in zoology. These names are freely available on-line through ION, the Index of Organism Names. The complete *Zoological Record* is available through institutional subscription. The *Nomenclator Zoologicus* (Neave, 1939–1996) is now available as a searchable on-line listing of most generic names published in zoology from 1758–2004.

Listings of species names are difficult to prepare on a comprehensive basis because of the multitude of taxa. Nonetheless, at least one work attempted such a universal listing for animal names published between 1758 and 1850 (Sherborne, 1902–1932). This work is valuable in discovering and attributing older names, especially those placed in large, poorly defined genera of early authors and that may now reside in several families. The *Index Animalium* is also now available on-line.

Botany

Botanical systematics, and its attendant nomenclature, has a somewhat more streamlined history than that in zoology. Sources such as the *Index Kewensis* offer a centralized source of information of a sort found only widely scattered in the zoological literature. On the other hand, the *Zoological Record* serves as a more-or-less comprehensive indexing source in zoology, whereas no equivalent publication exists in botany. The Botanical Code, available on-line, not only provides

an up-to-date rendering of the rules of nomenclature in botany (including mycology) but also includes a list of all "conserved" names for chlorophyll-producing organisms, fungi, and slime molds. A further on-line source for nomenclatural information in botany is the International Plant Names Index (IPNI). This on-line index is the result of a collaborative effort by The Royal Botanic Gardens, Kew, The Harvard University Herbaria, and the Australian National Herbarium. It provides information on names and associated bibliographical details for all seed plants, ferns, and fern allies.

Systematic Databases

Managing information on no fewer than 2.5 million species of living organisms—and possibly 10 times that many—is a massive task. In the electronic age, two technological approaches now dominate attempts to acquire, organize, and disseminate this information. First, virtually all such efforts have database technology at their core. Second, the Internet now plays a central role in making this information available.

The types of data being managed and delivered can be divided into three more-or-less discrete categories.

1. Nomenclatural data
   a. Names (including synonymy, homonymy, and nomenclatural types)
   b. Literature references
   c. Type specimen information
2. Specimen-based data
   a. Label data from individual specimens
   b. Specimen deposition (museum; private collection)
   d. Distributional information
   e. Biological associations, economic status, etc.
3. Taxon-based data
   a. Character data and analyses
   b. Images

Although these areas are intimately related to one another, historically and functionally they are distinct, and therefore each presents its own management problems and required solutions. We will discuss each category and provide examples, then discuss how they are being integrated on the Internet.

Nomenclature and Taxonomy

Whereas at one time all information on biological nomenclature and taxonomy existed in printed form, it is inexorably moving to electronic media. We have already mentioned the *Nomenclator Zoologicus, Zoological Record,* and

International Plant Names Index, all of which are available on-line and allow for rapid context-based searching.

A number of national and international consortia and initiatives (e.g., ITIS, Species 2000, UBio, ZooBank) have been formed to try to grapple with this issue of acquiring, organizing, and delivering up-to-date information on nomenclature and classification. Each embodies a slightly different primary objective and applies different methods to achieve that objective. ITIS and Species 2000 are self-contained enterprises that provide data they have organized themselves or that has been provided to them, which is delivered directly from their Web servers. The ultimate goal is to provide *authority files* for the names of all taxa and to place those names in some classificatory context. In point of fact, species authorities such as Species 2000, ITIS, and the GBIF ECat initiative are databases of species names, which do not necessarily include all available names and often provide only minimal data (such as author and year of publication) and omit vital nomenclatural information, such as whether or not the name refers to a valid taxon.

The nascent ZooBank initiative is strictly nomenclatural in nature and was organized as a way of registering names proposed in zoology. This initiative on the part of the ICZN will potentially add an improved sense of order to the introduction of new names and allow for the assignment of life science identifiers (LSIDs; a restricted example of the global unique identifier [GUID] concept) to new names in zoology.

UBio is a Web "aggregator" of information otherwise available on the Internet, but because of the location of that information on myriad sites it is not directly interpretable through the results assembled by Web search engines. UBio uses nomenclature as a core organizing principle, and through the application of sophisticated software approaches is capable of taking nomenclatural data—and other attendant biological information—and rendering it in a much more meaningful format than a search engine can. The UBio approach relies on the ability of technological approaches to parse nomenclatural data, but sometimes with limited success; as for example, in the case of homonyms such as Archaea, which is a name applied at a high level to basal unicellular lineages and to a genus of spiders.

Many freestanding sources that deliver information on nomenclature and classification are now available on the Internet. Two examples that deliver information on classification, nomenclature, and the relevant literature in the form of HTML pages are the *World Spider Catalogue* (Platnick, 2008) and the *Catalog of Sphecidae* (Pulawski, 2008).

On-line catalogs also rely on relational databases to store and deliver information. Although this approach may appear as a "black box" to the user, it offers the power to search and organize information in a way that is not possible with "flat" HTML pages. Possibly the largest such database is *The BioSystematic Database of World Diptera* (Evenhuis et al., 2009), which delivers information on nomenclature and classification for well over 100,000 species of true flies and the literature pertaining to those names. The *Hymenoptera Name Server* (Johnson, 2007)

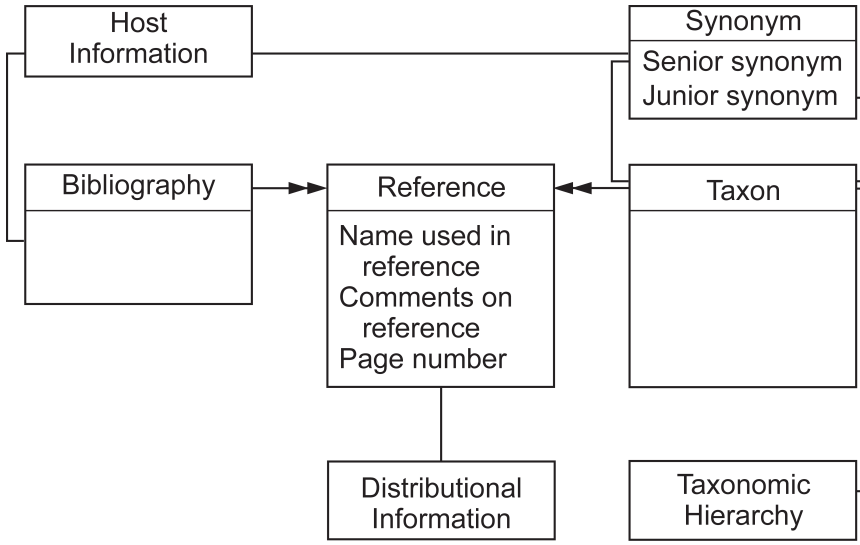

Fig. 7.5. A relational database model for managing specimen data, simplified from the application of Schuh and Cassis (2004).

delivers information for a large number of groups within the Hymenoptera, most of the data being supplied by specialists in the field rather than being compiled directly by the creator of the database. A third example is the *On-line Systematic Catalog of Plant Bugs* (Schuh, 2008), which currently delivers detailed nomenclatural and other information on more than 10,000 valid species of Miridae (Heteroptera), via a database that makes direct connections between the names, the literature, and information on host associations in the group. This Web application allows for searching via categories of information (e.g., genus, species, author, host, geographical distribution), or "drilling down" through a taxonomic hierarchy, the latter approach helping to ameliorate the "black-box" effect. A simplified representation of the database schema is shown in Fig. 7.5.

Specimen-Based Data

The creation of specimen-level databases in electronic form is a practice that goes back at least three decades and that has seen a progression of development directly associated with the increased sophistication of database software and the creation of the Internet. All of these databases were originally freestanding products used within their own institutions, usually as collection management tools, and were essentially a replication of ledger books or card files. Progressively they have moved to serve a much broader purpose, allowing for the assembly of specimen data across collections and the mapping and analysis of distributions, with

the consequence that large quantities of data are now available to the general and scientific public over the Internet.

The Costa Rican Instituto Nacional de Biodiversdad (INBio) was one of the first institutions to apply database technology to the acquisition and maintenance of systematic collections from the day of its founding. Those efforts involved the attachment of bar-code labels to all specimens acquired by the institute and the entry of all specimen data into the database at the time the specimens came from the field and were mounted and labeled. This "prospective" approach offers opportunities for future users of the collection to digitally mine its data and perhaps discover patterns that would be onerous to derive by retrospective data capture.

Australia is distinguished for having the greatest achievements in national specimen-database coordination, particularly in botany through *Australia's Virtual Herbarium.* Information on Australian plant taxa is available through a portal that allows for assembly of data from eight major herbaria in Australia. Not only are the specimen holdings of these herbaria largely available in database form, localities for a very large number of the specimens have been "georeferenced," allowing for the creation of distributional maps in real time on the Internet.

In the United States, several consortia have been formed on the basis of taxonomic affiliation rather than on the basis of political geography. These include *HerpNet* (2008), *Mammal Networked Information System* (MANIS, 2008), and *Fish Net 2* (2005). These approaches share features in common with Australia's Virtual Herbarium, collectivizing the search for specimen data across a range of collections.

The Australian initiative is seen in a global form in the *Global Biodiversity Information Facility (GBIF).* GBIF is a confederation of member institutions around the world, each of which brings data to bear on the issue of assembling biodiversity information. GBIF was conceived as a clearinghouse for information, as opposed to being a primary data provider. All information made available through the GBIF Internet portal comes from its member institutions and organizations. At the core of organizing that information is biological nomenclature, but the data being delivered is derived almost entirely from specimens residing in collections housed in museums around the world.

While most of the data referred to above was assembled over a local-area network, or even on a stand-alone basis, data capture itself has now also moved to the Internet. The National Science Foundation–funded Planetary Biodiversity Inventories project, overseen by R. T. Schuh and G. Cassis, implemented what has become a more-or-less "standard" relational data model for the capture of specimen data, the core elements of which are shown in Fig.7.6. Although the structure of the data used by Schuh and Cassis is not unique, they forged a new approach to data capture. Because members of their team of investigators were located on three continents in five institutions, they chose to develop a Web interface that allowed all investigators to enter data into a centralized database in real time, rather than capture data on a stand-alone basis and integrate it at a later date, either in a single database or through a Web-aggregator such as GBIF. This approach allowed them

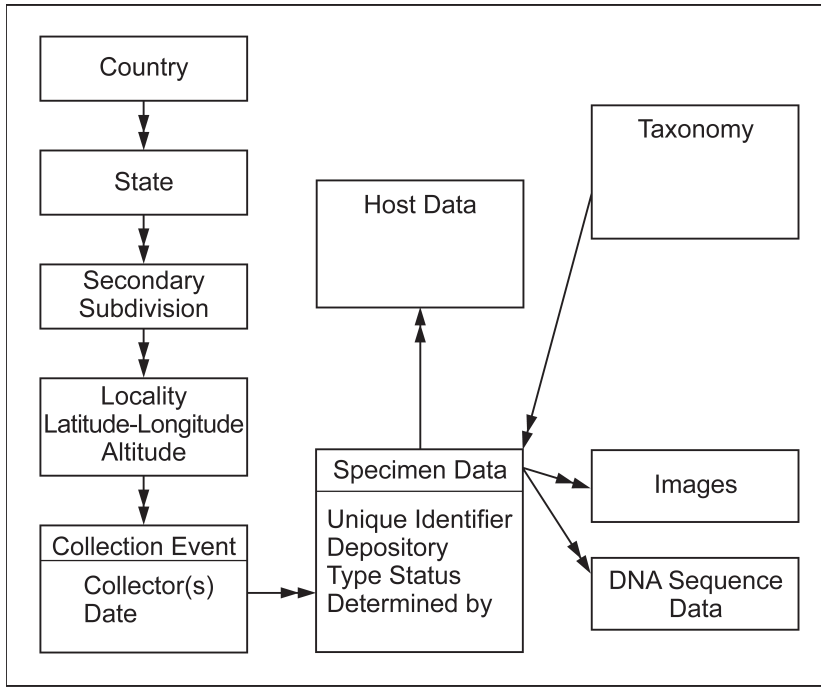

Fig. 7.6. Relational database model for managing bibliographic + nomenclatural information, simplified from the application of Schuh (2008).

to enter data from the site of any collection with a high-speed Internet connection and further allowed for the application of centralized georeferencing and database management. In the view of Schuh and Cassis, this scheme provided much more precise control over their attempts to achieve uniform data quality.

Databases of vertebrate collections are—like those for plants—relatively straightforward from a logistical point of view because the specimens are large, often have individual numbers associated with them, and the absolute number of specimens is manageable. Electronic databases exist for many vertebrate collections; a substantial number of specimens in many botanical collections are also databased.

Insects, and some other nonvertebrate groups, present distinct problems when creating specimen databases because of the very large numbers of specimens and the fact that individual specimens are seldom labeled so that they can be uniquely identified. Bar coding, used in some plant-specimen databases, has been utilized to a limited degree for insects and may offer a solution to providing the unique specimen identifiers required for accurate specimen tracking. For example, INBio was one of the first institutions to use small bar-code labels as unique specimen identifiers. The Schuh and Cassis project—mentioned above—adopted "matrix codes," which are more compact and therefore well suited to use on small specimens but nonetheless allow for the encoding of a very large amount of information.

As specimen data accumulate in Web-based archives, it becomes increasingly important for researchers to ensure that their voucher specimens—the individual organisms studied, or remaining parts thereof—are uniquely labeled and archived as well. Morphologists have always been reasonably conscientious about this, but it has been a problem with DNA-based studies. Preservation of voucher material insures that future researchers will be able to verify identifications of specimens examined. It is also critical to insure that disassociated parts, such as genitalic slide mounts or DNA extractions, are labeled with unique identifiers that allow their association with the voucher specimen(s).

Taxon-Based Data

There are a number of public databases with professional managers/curators that provide archival storage and access to data generated by individual researchers. One of the largest and most familiar of these is National Center for Biotechnology Information (NCBI) GenBank, run by the U.S. National Institutes of Health. GenBank stores DNA sequences and data associated with them, one of the few taxonomic databasing efforts deemed significant enough, due to its medical applications, to warrant dedicated facilities and permanent staff. While most of the sequences in GenBank are derived from a few model taxa, there is a taxonomically diverse array of sequences resulting from various molecular systematic and population genetic studies. These can be accessed via a semi-phylogenetic hierarchical classification scheme. GenBank relies on the (sometimes faulty) taxonomic expertise of its contributors to provide accurate identifications of the organisms from which the sequence data are derived. Many journals now require submission of DNA data to GenBank as a criterion for publication, and the database has experienced exponential growth over the past decade.

Several additional database initiatives with a systematic focus, some sponsored by the U.S. National Science Foundation, help to bring systematic data to the Internet. MorphBank is a searchable repository of digital images that represent various taxa and their characters that have been employed in phylogenetic analyses. TreeBase is a database composed of executable data sets from published systematic studies. Both of these rely on individual systematists to submit their data, which are posted on the Web under a creative commons license. The Tree of Life Web site represents an effort to summarize hypotheses of the hierarchy of life in a single tree. The individual clades are the responsibility of groups of specialists, and there is no effort to discover a globally parsimonious arrangement of the taxa or to represent the degree of support for clades. To date, the Tree of Life contains pages representing only a fraction of biological diversity. The Encyclopedia of Life is large-scale initiative that intends to present a Web page for every species. Discoverlife packages and provides data and images on a large and diverse array of plant and animal taxa, using authority files, interactive keys, species pages, and real-time mapping.

Suggested Readings

Blackwelder, R. E. 1967. *Taxonomy. A Text and Reference Book.* John Wiley and Sons, New York. 698 pp. [A now somewhat dated but informative review of the relationship between nomenclature and taxonomy]

Borror, D. J. 1960. *Dictionary of Word Roots and Combining Forms.* Mayfield Publishing Company, Palo Alto, California. 134 pp. [An aid to the formation of scientific names]

Brown, R. W. 1956. *Composition of Scientific Words.* Published by the author. [A useful compendium of Latin used in biological nomenclature]

Crowson, R. A. 1970. *Classification and Biology.* Aldine Publishing Company, Chicago. [A pointed disquisition on the codes of nomenclature and their history, as well as a readable and cogent essay on biological classification]

Farris, J. S. 1979. The information content of the phylogenetic system. *Systematic Zoology* 28:483–519. [A sometimes technical discussion of how and why hierarchic classifications store and transmit information]

Knapp, S., G. Lamas, E. N. Lughadha, and G. Novarino. 2004. Stability or stasis in the names of organisms: the evolving codes of nomenclature. *Philosophical Transactions—Royal Society of London,* Series B Biological Sciences 359:611–622. [A useful review of changes in the codes of nomenclature]

Stearn, W. T. 1992. *Botanical Latin. History, Grammar, Syntax, Terminology, and Vocabulary.* Fourth edition, revised. Timber Press, Portland, Oregon. 546 pp. [A valuable aid to the formation of scientific names]

Wiley, E. O. 1979. An annotated Linnaean hierarchy, with comments on natural taxa and competing systems. *Systematic Zoology* 28:308–337. [A detailed discussion of classificatory conventions]

8

Historical Biogeography and Host-Parasite Coevolution

In Chapter 6, we saw how consensus techniques can be used as a way of summarizing information shared in common among multiple most-parsimonious cladograms and for forming classifications. We will now examine the use of this and other approaches for understanding historical biogeographic relationships and patterns of associations between parasites and their hosts.

The subject matter of this chapter deals primarily with analyses that are often placed under the heading of *cospeciation* or *codivergence,* situations in which hosts and their parasites appear to have intimate, long-standing historical connections, and where speciation in the host may result in speciation in the parasite. This type of association appears to obtain for many internal parasites and for certain external parasites, such as lice. In addition, or on the other hand, there is a whole class of host associations, such as those between herbivorous insects and their food plants, where the relationship of the parasite and the host does not show such long-term fidelity but involves many apparent host shifts. These latter situations are often referred to under the more liberal heading of *coevolution* and will be addressed in Chapter 9.

Historical Biogeography

A Brief Historical Review

Whereas methods for discovering the ordered distribution of attributes among organisms are now well established, the same cannot necessarily be said for techniques used to analyze recurrent patterns of geographic distribution. Nelson (1978a:269) noted that "Biogeography is a strange discipline. In general, there are no institutes of biogeography; There are no departments of it. There are no professional biogeographers—no professors of it, no curators of it." We will review very briefly the history and nature of biogeographic inquiry from the late 1850s forward, paying particular attention to the relationship of cladistics and biotic distributions. Reviews of the pre-Darwinian history of biogeography are given by Nelson (1978a) and Nelson and Platnick (1981: Chapter 5).

The term *biogeography* has had many meanings attached to it. We will treat it as having two connotations: (1) the study of biotic distributions and their short-term ecological influences, a field often referred to as "geographical ecology" or "ecological geography"; and (2) the study of biotic distributions resulting from longer-term historical factors, an area of inquiry usually called "historical biogeography." Treatises on the subject of biotic distributions have not always made clear these distinctions, and indeed some authors have purposely blurred them (Endler, 1982). Biogeography as used in the following pages means *historical biogeography.*

The study of historical biogeography traditionally has been heavily influenced by the state of knowledge of geology and geologic processes. Thus, when the orthodoxy of geology did not entertain the possibility of continental movements, biogeographers often attributed distributional disjunctions solely to the *dispersal* powers of the organisms involved. When plate tectonics became the accepted explanation for orogeny, ocean formation, and other feature changes on the earth's surface, biogeographers soon began to couch their explanations of organismal distributions to mesh with the new geological paradigm.

Some biogeographers have proposed distributional theories independent of influence from other fields of inquiry. For example, the Darwinian contemporary Joseph Dalton Hooker, one of the most influential botanists of his time, was, and remained, an ardent supporter of the idea that the present-day biotas of New Zealand, Australia, and South America achieved their current distribution via previous connections among these land masses. In the same vein, Alfred Russel Wallace (1860) argued for the former connection of land masses as a way of explaining his observations on the distributions of animals in the Malay Archipelago. Whereas Hooker remained true to what he believed to be the most obvious explanation of the data, Wallace soon capitulated to the Darwinian—dispersalist—point of view, which was virulently against modification of geological features as a method for explaining observed biotic distributions (Fichman, 1977). The stabilist view of geography adopted by Darwin and many of his contemporaries derived from their aversion to the "fanciful" creations such as land bridges invoked by Hooker and others to explain modern-day continental biotic disjunctions involving tremendous distances. They believed dispersal of the organisms themselves, across the oceans or circuitously over the contiguous land masses, offered a more reasonable explanation for these observed phenomena.

But, after reading the early twentieth-century expositions of Alfred Wegener (e.g., Wegener, 1966) on continental drift, you will likely conclude that the data—even nearly 100 years ago—spoke clearly and strongly for the concept of continental movements. For example, Wegener's arguments included geodetic data about the movement of Greenland relative to Europe; the excellent fits of the continental outlines of North America and Europe and of South America and Africa, as shown by the Paleozoic geological similarities of the Cape Province of South Africa and the mountains in Buenos Aires Province, Argentina; and the known distribution of evidence for Permo-Carboniferous glaciation on the southern continents showing

the "invalidity of [continental] permanence theory." Wegener also found substantial corroboration of his theory in the distributional patterns of Recent plants and animals. In short, there seemed to Wegener to be a massive body of corroborative evidence for the theory of continental movement as opposed to the then-current theories of a contracting earth, subsiding land bridges, or stable continents.

Wegener's views were received enthusiastically by some, including the South African geologist-paleontologist Alexander du Toit. However, influential Americans, including mammalogist William Diller Matthew, geologist-paleontologist George Gaylord Simpson, and entomologist-biogeographer Philip J. Darlington were resolute in rejecting Wegener's ideas as a way of explaining biotic distributions. This, in the case of Darlington and Simpson, even after the acquisition of modern geophysical evidence for continental movements. An analogy may be drawn with the rejection of Darwin's theory of evolution by the powerful Victorian vertebrate anatomists Louis Agassiz and Richard Owen.

One might wonder whether the evidence of biotic distributions has a legitimate voice of its own, or if it must always be tempered with the more "tangible" knowledge of earth processes derived from studies in geology. History suggests that plants and animals do have a story to tell, and those who have disregarded the biotic evidence have often failed to appreciate the ultimate strength of the data provided by organisms themselves. One need only contrast the conclusions of Darlington (1965) and Brundin (1966) with regard to the biotas of the far Southern Hemisphere. Darlington rejected cladistics and also resisted accepting continental drift as an explanation of the distributions of those biotas. He "felt certain" that all plants and animals have reached New Zealand across the water, at least during the Tertiary and probably before that. Darlington drew this conclusion even for those many plant groups with distributions restricted to the southern portions of the southern continents, and with clear connections of phylogenetic affinity among those land masses. In a great leap of logic, he then concluded (Darlington, 1965:107):

> If these plants and all other plants and animals that have reached New Zealand crossed water gaps, no land connections are needed anywhere across the southern end of the world to explain the distribution of far-southern terrestrial life.

Brundin (1966), through the use of phylogenetic methods, demonstrated repeated patterns of intercontinental connection within multiple lineages of chironomid midges in the far south (see Fig. 8.4). He attributed those phylogenetic connections to former land connections, including Antarctica, which he explained via continental drift. In short, whereas Darlington adhered to the prevailing systematic and geological dogma of his formative years and clung to ad hoc explanations of patterns easily accommodated with the bolder tools of plate tectonics and cladistics, Brundin accepted those tools and treated concordant patterns of geographic distribution parsimoniously, as the result of common underlying causes.

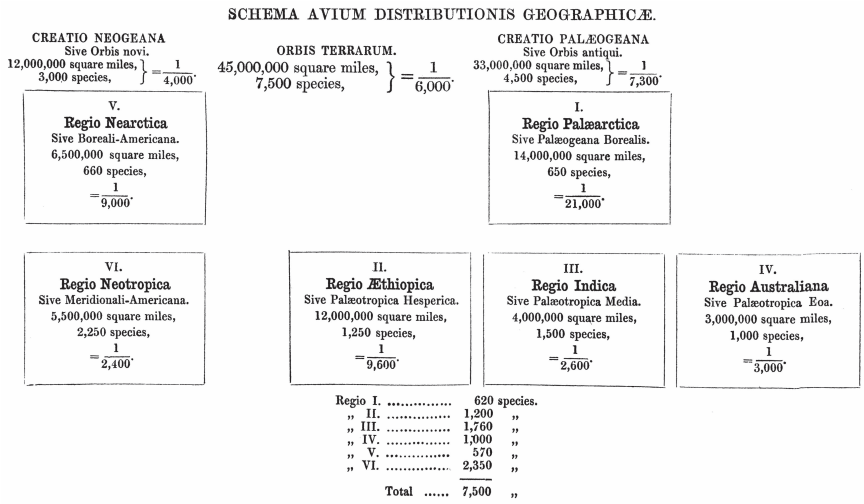

Fig. 8.1. Sclater's (1858) scheme of the biotic regions, based primarily on the study of birds.

Having admitted that there are meaningful geographical patterns to the distribution of plants and animals, how might we analyze them? The early history of this enterprise was largely descriptive and is probably best characterized in the work of the British ornithologist Philip Sclater. Sclater's mark on the field was made in his paper "On the General Geographical Distribution of the Members of the Class Aves" (Sclater, 1858), in which he proposed six biogeographic "regions," which are employed today nearly in their original form under the names Nearctic, Neotropical, Palearctic, Ethiopian, Oriental, and Australian regions. Sclater's division of the world's biota corresponded roughly to the major continental land masses, with the exception of the Oriental region (Regio Indica) (Fig. 8.1), and was soon accepted by Wallace in his works on biogeography (Wallace, 1876), and by many others. Sclater's regions represented recognizable geographic features that showed major biotic differences among themselves, and provided an organizational scheme for cataloging the world's biological diversity into relatively distinct regional floras and faunas. It would be some time before Leon Croizat, a botanist, and Willi Hennig, recognized that distributional data might be subject to new and improved means of analysis, irrespective of the geological orthodoxy. The works of both authors proved formidable to comprehend.

Croizat's works are prolix in the extreme, achieving a level of verbosity possibly unequalled in the biological literature. His major ideas are most mercifully summarized in *Space, Time, Form: The Biological Synthesis* (Croizat, 1962). Croizat said, in reference to common patterns of animal and plant distributions across the continents, that "Nature forever repeats," an observation that he believed demanded explanation. He dubbed his approach "Panbiogeography," the core activity of which was "track analysis." Croizat's data on relationships and distributions of taxa came from monographs and revisions, much of it from works

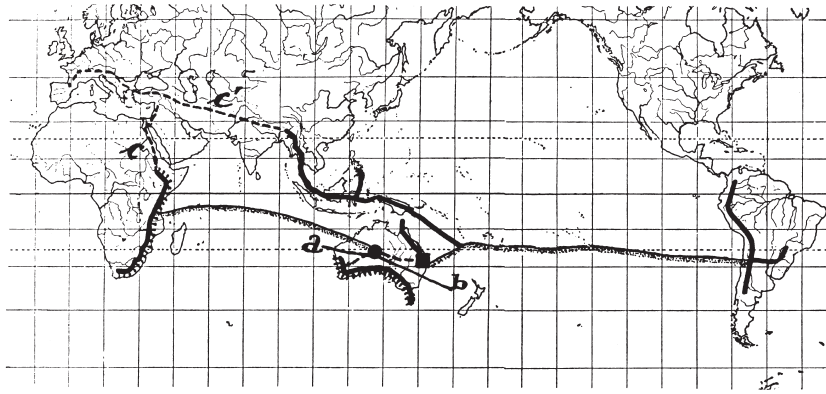

Fig. 8.2. Tracks indicating the distribution of the Proteaceae (Personioideae and Grevilloideae) (from Croizat, 1962: fig. 42, p. 169).

that had nothing to do with the Euphorbiaceae, the group of plants on which Croizat himself had specialized. Croizat drew tracks to connect disjunct areas possessing related organisms, such as members of the angiosperm family Proteaceae, as shown in Fig. 8.2. When multiple groups of organisms displayed the same disjunct distributions, Croizat termed the phenomenon "vicariance." Its explanation was geologic history. (Note that the term *vicariance* has evolved in the more recent literature to indicate the process of subdivision of ancestral populations by extrinsic barriers.)

Croizat's approach has been applied in its original form by only a few workers, notably R. C. Craw (e.g., Craw, 1982, 1983; Craw et al., 1999), although the seeming reality of many of the repetitive distributions identified by Croizat has been documented by many other authors. An example comes from the work of Weston and Crisp (1994) on the "waratahs," a subgroup of Proteaceae (Fig. 8.3), which, when analyzed in detail, portray a pattern of distribution very similar to that depicted by Croizat.

Hennig's work on biogeography was described by Ashlock (1974) as "at once brilliant and badly conceived [, and] its title and organization are such that few but dipterists would be attracted." Hennig's major contribution to biogeographic analysis (Hennig, 1960) dealt with the Diptera of New Zealand as an example problem and was an extension of his methodological work on phylogenetic relationships. Hennig's approach relied heavily on the *progression rule,* the idea that if an organism has migrated to new areas, developing new characters as its distribution expands, the progress of migration is marked by sequentially more-derived characters. This rule assumes that organisms in the original areas undergo little or no change, a questionable assumption at best.

Hennig's biogeographic theory, despite what are now viewed as its flaws, is notable because it established a direct connection between phylogenetic analysis

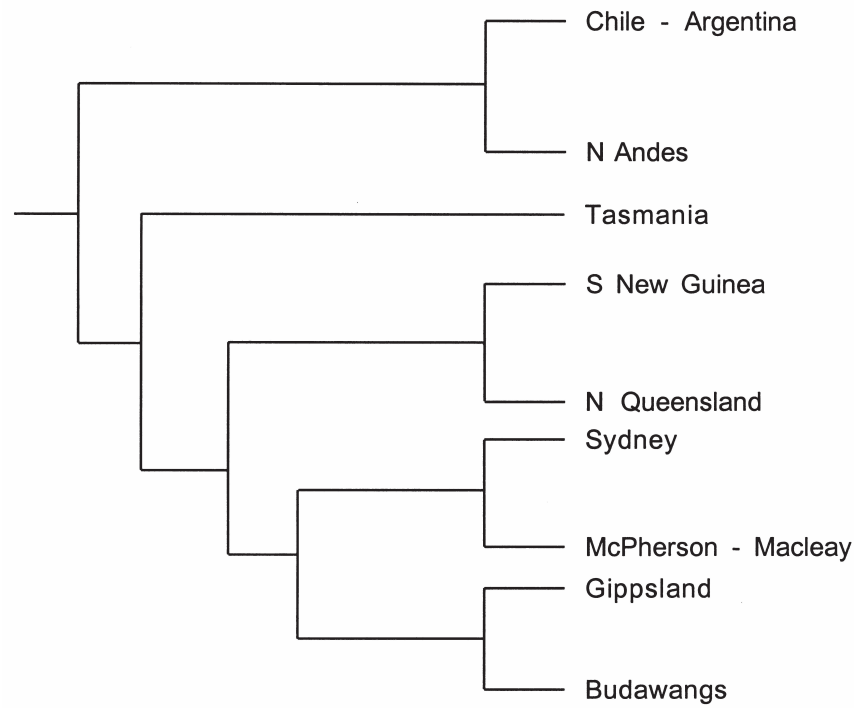

Fig. 8.3. Intercontinental connections between eastern Australia and montane and southern South America as shown by the waratahs, a subgroup of Proteaceae (from Weston and Crisp, 1994).

and the study of biotic distributions. Nonetheless, it might have remained obscure, even in translation, had it not been for the monographic work of the Swedish entomologist Lars Brundin (1966), who applied both Hennig's phylogenetic and biogeographic methodologies to his studies of chironomid midges from the southern continents. Brundin showed that there were repetitive distributional patterns among midges of that part of the world (Fig. 8.4), and that—in vindication of the views of Joseph Dalton Hooker with regard to plants—the midge distributions implied the connection of the southern continents. Furthermore, in Brundin's view, the patterns supported Hennig's progression rule. The significance of Brundin's findings was widely recognized. The appearance of his work coincided felicitously with the spreading belief that continental drift was a scientifically credible theory, as well as with the publication of a review article and English translation of Hennig's book-length exposition of his theory of phylogenetic systematics, making phylogenetic methodology accessible to a much broader audience (Hennig, 1965, 1966).

Rosen's empirical studies (1975, 1978) and the theoretical advances of Nelson and Platnick (Platnick and Nelson, 1978; Nelson and Platnick, 1981; Platnick,

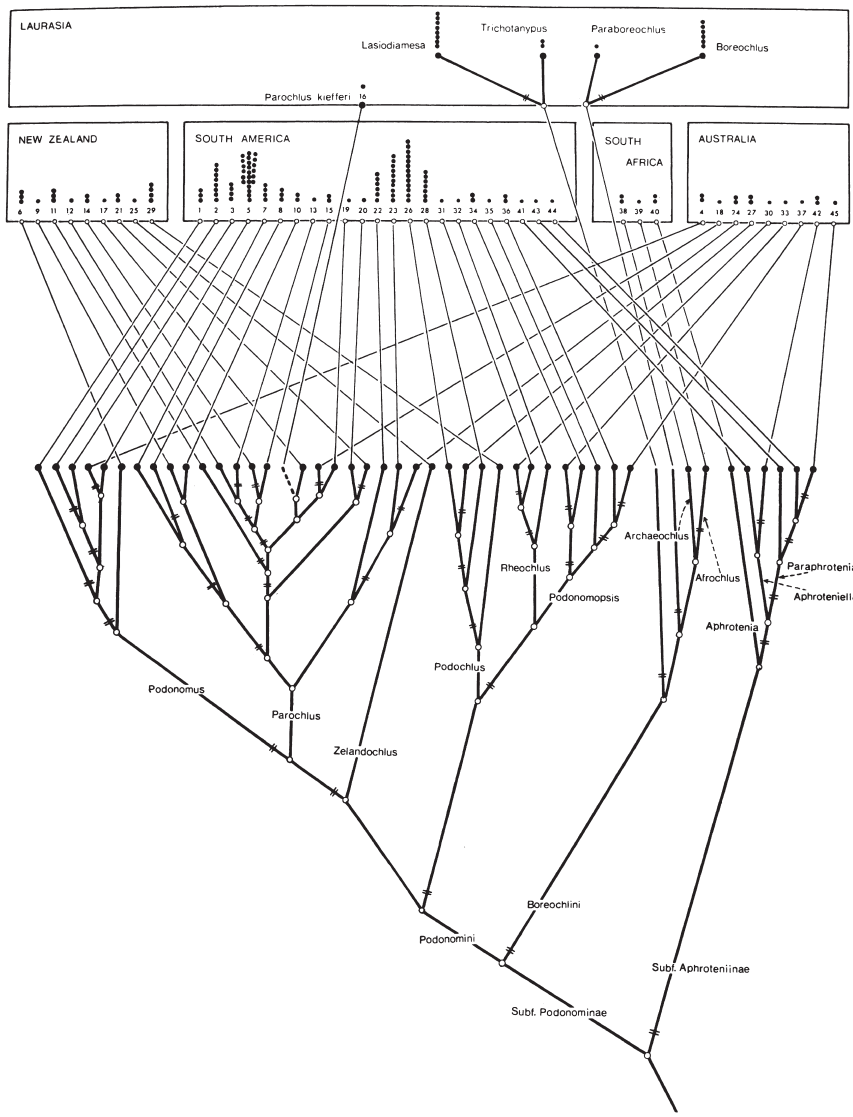

Fig. 8.4. Disjunct distributions on southern continents as evidenced by midges of the family Chironomidae (Brundin after Nelson and Ladiges, 1996: fig. 2; courtesy of The American Museum of Natural History). Note the repeated pattern of occurrence in New Zealand, South America, and Australia in separate groups of midges.

1981b) followed directly from the seminal works of Hennig and Brundin. The approach advocated by these authors has come to be called *cladistic biogeography,* as by Humphries and Parenti (1999), and for a time dominated the historical study of plant and animal distributions as practiced by systematists. The

analytic precision of cladistic biogeographic approaches has been refined through the appearance of computer algorithms to solve the sometimes extremely complex problems. Concomitantly, alternative approaches to the analysis of historical biogeographic patterns have sprung up, most being placed under the banner of "event-based" approaches. Lastly, the vigor with which systematists and biogeographers pursued the search for congruent distributions during the last 30 to 40 years has been challenged by some who argue that the types of patterns once championed by Brundin can be just as satisfactorily explained without the influence of plate tectonics and other long-term events of earth history. We will now examine the premises and methods of each of these approaches.

Sidebar 13
Biogeographic Terminology

The following terms are widely used in the discussion of cladistic biogeography. Clarification of their intended meaning will help the reader to comprehend the remainder of the discussion in this chapter.

component a (monophyletic) group of taxa (areas) connected at a node on a cladogram
general area cladogram a cladogram showing the resolution of area relationships among a variety of taxon-area cladograms
missing taxon a taxon absent from one of the areas in one of the area cladograms being compared, the result being noncorrespondence of distributions across taxa
redundant (paralogous) distributions the sequential or multiple occurrence of the same area on a area cladogram; a phenomenon observed to occur frequently among the basal taxa (areas) on cladograms (Nelson and Ladiges, 1996)
taxon-area cladogram (or area cladogram) a cladogram of taxa for which the distributions of the taxa have been substituted for the taxa themselves
term a terminal taxon (area) on a cladogram
widespread taxon a taxon that occurs in more than one area of endemism, as areas of endemism are interpreted on the basis of the distributions of other taxa

Cladistic Biogeographic Methods

As with systematic methods themselves, modern researchers have endeavored to strip unjustified assumptions from current methods in historical biogeography, with the intent of discovering patterns in the data without presupposition of untestable scenarios and invocation of ad hoc hypotheses. Among historical assumptions that are no longer deemed valid are the following:

Center of origin: This long-held biogeographic dictum postulates a priori that taxa arise in one identifiable area and disperse from there to eventually achieve their present distribution.

Progression rule: This Hennigian tenet treats all distributions as having polarity, with the oldest taxa inhabiting the ancestral area, while more recently derived taxa occur progressively further from the center of origin.

Ad hoc theories of dispersal: This is the means traditionally invoked for allowing all taxa to achieve their present range; that is, to expand their distribution beyond the identifiable center of origin. Dispersal was (and can be) used to accommodate nearly any pattern of distribution. While it is indisputable that some taxa, such as inhabitants of oceanic islands, have achieved their current distributions by dispersal, such an explanation has no predictive value for the distributions of other taxa and should be invoked only to explain those aspects of distribution that do not conform to common patterns explicable via geological and other forces of earth history.

These postulates have been largely replaced with the view that shared biogeographic patterns are the result of historical range fragmentation over time, a concept to which the term *vicariance* is now generally applied. Dispersal is then invoked to explain patterns that do not conform parsimoniously to the general pattern, such as widespread taxa. Somewhat paradoxically, the fragmentation of ranges, through orogeny, continental drift, or other means conforms closely to the concept of allopatric speciation under which most modern pre-cladistic biogeography was done by noncladistic systematists—using the dispersal model.

The data of modern historical biogeography are *taxa* and *areas of endemism.* An area of endemism "can be defined by the congruent distributional limits of two or more species" (Platnick, 1991). Taxa represent the analog of characters in phylogenetic analysis; areas of endemism are the analog of taxa.

What distinguishes nearly all current methods from past practice is the necessity of having (multiple) explicit hierarchic schemes of relationships for taxa. The method, as first proposed by Rosen (1975, 1978), involves replacing taxon names on a cladogram with the areas of endemism where the taxa occur, forming what are known as *area cladograms* or *taxon-area cladograms.* Thus, a hierarchic scheme of areas is revealed (see Fig. 8.6). If all taxa have responded to earth history in a like manner, a single scheme of area interrelationships—a general area cladogram—would be the result, and no further analysis would be required. Observation suggests, however, that such is seldom if ever the case for a variety of reasons, which might include the following:

1. Taxa may be of different ages and therefore have undergone geographical differentiation in response to different phenomena.
2. Different taxa may have responded to the same phenomenon in different ways.
3. Theories concerning areas of endemism may be in error because of subsequent dispersal, extinction, poor sampling, or the hybridization of land areas.

The criterion for identifying areas of endemism is simply the known geographic distribution of a taxon, and the test of the theory—that other taxa occur there—is usually much less clear-cut than is the case with morphological characters (see

Harold and Mooi, 1994; Humphries and Parenti, 1999). Nonetheless, there are guidelines, possibly even methods, for recognizing areas of endemism. Platnick (1991) observed that we might always wish to pursue biogeographic studies using taxa with the smallest ranges and the largest numbers of species for the area under study. One of his favored examples is the treatment of cool-temperate southern South America as a single area, even though many groups of spiders, and some other chelicerate arthropods such as Opiliones, show extreme diversity and highly localized distributions within this geographic region. Again, we emphasize that just as there are clades nested within clades, so may there be areas of endemism nested within areas of endemism.

The treatment of the known distributions of species as de facto areas of endemism was criticized by Axelius (1991) in cases where the distributions of species are overlapping. He offered the solution shown in Fig. 8.5. The argument for this approach lies in the observation that the overlap in the distributions of taxa A and B must be due to dispersal of one or both of the species. Therefore, the portion of the distribution of taxon A overlapping with the distribution of taxon B should be coded separately from the nonoverlapping portion. Otherwise, the resulting area cladograms will not be completely informative with regard to the areas occupied by the taxa. In cases of partial overlap, Axelius recommended coding the overlapping portion as a separate area, in anticipation of determining which part of the distribution was the result of dispersal.

Whereas implementation of the above-stated criteria is admittedly a somewhat subjective process, Szumik et al. (2002), Szumik and Goloboff (2004), and Goloboff (2005a) have developed objective criteria and produced computer programs that aid in the recognition of areas of endemism. The approach of Szumik and colleagues proceeds by first dividing the area occupied by the species under study into a grid, then choosing sets of cells from the grid to which collections of species are restricted. Szumik and Goloboff (2004) refined the technique by applying a more complex set of criteria for whether a species is present or not, thus allowing for the recognition of areas based on patchier distributions. The size of the grid cells can be varied to accommodate the density of sampling. Success in recognizing areas of endemism through the use of these algorithms is as of yet little tested; it ultimately depends on multiple taxa occupying the same area and the refinement of the grid size to fit the particular situation.

The core problem of cladistic biogeography then becomes, "How do we combine nonidentical area cladograms for different groups to produce a summary of the information common to them." The process proceeds as follows (Nelson and Platnick, 1981; Page, 1990a; Morrone and Carpenter, 1994):

1a. *Construct taxon-area cladograms from taxon cladograms.* Areas of endemism are determined for all taxa, the widespread taxa being coded as occupying more than one area of endemism. The taxon cladogram is then labeled with the areas of endemism as shown in Fig. 8.6.

1b. *Convert taxon-area cladograms into resolved area cladograms.* As originally described in detail by Nelson and Platnick (1981) in their exposition of

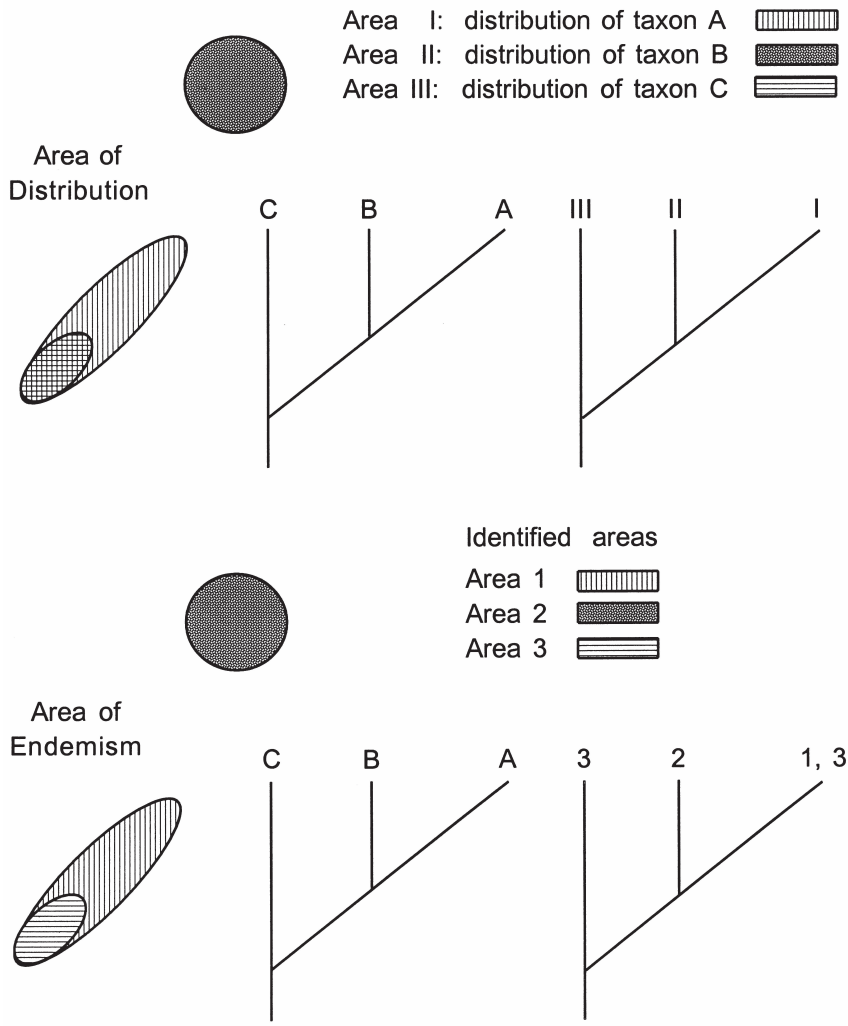

Fig. 8.5. Determining areas of endemism as potentially different from areas of distribution, according to the method of Axelius (1991). The upper portion of the figure shows distributions coded as areas. The bottom portion of the figure shows areas of endemism coded to recognize overlapping areas as distinct for all taxa.

"component analysis," any given area cladogram may imply a few to many "resolved area cladograms," primarily because of the occurrence of widespread taxa. Missing areas will result in some resolved area cladograms being different, but will generally not increase the numbers of resolved area cladograms.

Four approaches have been proposed for solving this problem, representing a set of *assumptions*—with arcane names—about how to deal with widespread taxa and missing areas. The solutions range from very restrictive to quite liberal. An

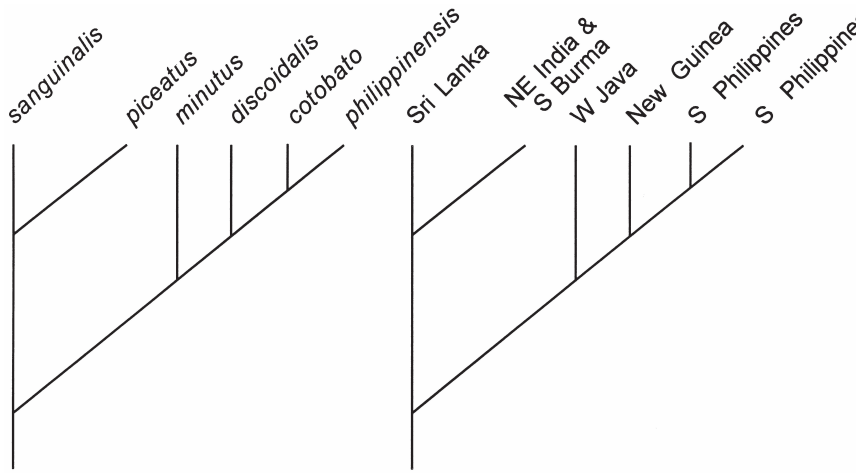

Fig. 8.6. Taxon cladogram (Stonedahl, 1988) and corresponding area cladogram (Schuh and Stonedahl, 1986).

alternative solution for paralogous (redundant) distributions has been offered by Nelson and Ladiges (1996) and will be discussed below. The attributes of the four assumptions can be summarized as follows (modified from Page, 1990a):

Approach	*Missing areas*	*Widespread taxa*
Brooks Parsimony Analysis:	uninformative	sister areas
Assumption 0:	primitively absent	sister areas
Assumption 1:	uninformative	paraphyletic
Assumption 2:	uninformative	float all but one occurrence

Brooks Parsimony Analysis (BPA; Wiley, 1988) derives directly from methods proposed by Brooks (1981) for the analysis of host-parasite data, where additive binary coding methods are used to prepare a matrix of data from area cladograms, which can then be analyzed using a standard parsimony program. BPA and Assumption 0 (Zandee and Roos, 1987) use similar methods for forming resolved area cladograms. They both treat the areas occupied by widespread taxa as monophyletic; that is, the areas that combine to form a widespread distribution are more closely related to one another than to any other areas occupied by the taxa under consideration. This aspect of BPA and Assumption 0 makes them the most restrictive of the four. The Brooks Parsimony Analysis and Assumption 0 differ only in their treatment of missing areas, which are viewed as uninformative by BPA and primitively absent under Assumption 0.

Assumption 1 (Nelson and Platnick, 1981) is yet less restrictive in that area relationships for widespread taxa can be either monophyletic or paraphyletic with respect to the taxon inhabiting them (Fig. 8.7). Thus, the widespread taxon may be

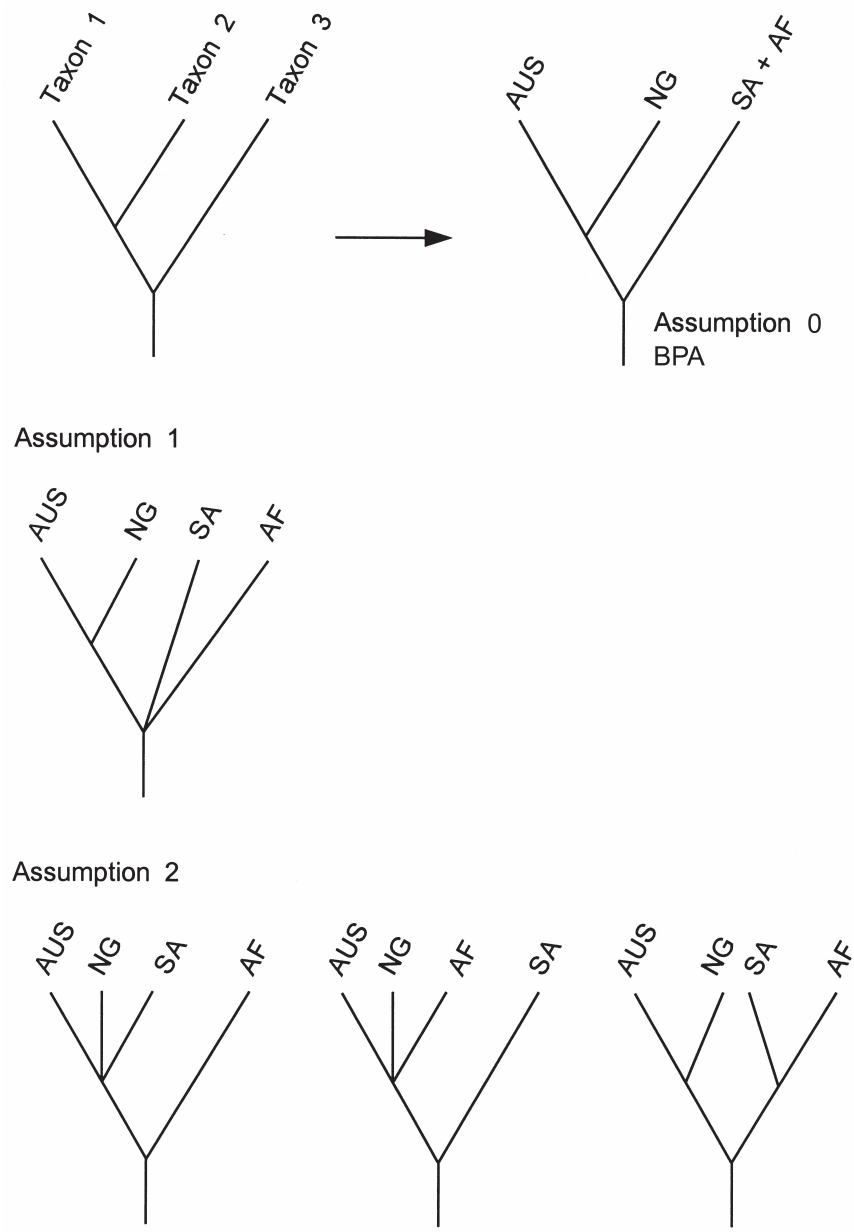

Fig. 8.7. Taxon-area cladogram and resolved area cladograms under Assumption 1 and Assumption 2. AUS = Australia; NG = New Guinea; SA = South America; AF = Africa. Assumption 1 does not require that SA + AF be monophyletic, as would be the case with Brooks Parsimony Analysis and Assumption 0, but it does not specify how either one might be related to the remaining areas. Assumption 2 specifies those possible area relationships (from Humphries and Parenti, 1986).

informative in combination with other taxon-area cladograms if the components of the cladogram with the widespread taxon are combinable with the components in a taxon-area cladogram where the widespread distribution is resolved. The taxon with the widespread distribution will never be recognized as representing more than one taxon.

Assumption 2 (Nelson and Platnick, 1981) is least restrictive with regard to the treatment of widespread taxa, and in the minds of some is the most reasonable interpretation of many biogeographic data sets. A widespread taxon on a single cladogram comprises a component containing unresolved area relationships, but when considered in concert with other cladograms the unresolved area relationships may become informative (Humphries and Parenti, 1986). Under this interpretation, some—but not all—of the areas of endemism comprising the distribution of widespread taxa may "float" on the general area cladogram. Thus, what were uninterpretable area relationships on the single taxon-area cladogram become resolved (Fig. 8.7). The taxon with the widespread distribution may in the future be interpreted as representing more than one taxon, potentially allowing selection among alternative hypotheses of area relationship.

As pointed out by Page (1990a), BPA, and Assumptions 0, 1, and 2 need not be the only assumptions one might make about the resolution of distributional information in order to prepare resolved area cladograms. For example, all possible combinations of ways of treating missing areas and widespread taxa could be invoked. The lack of a means for selecting among these alternative criteria that may imply different patterns has been a confounding source of ambiguity in the interpretation of complex biogeographic distributions.

2. *Preparation of general area cladograms.* Determining what information is shared in common across taxa can be achieved in a variety of ways. Both parsimony and consensus techniques have been used for finding general area cladograms; some of the possible approaches have been described by Page (1988, 1989, 1990a). As pointed out by Morrone and Carpenter (1994) in their comparison of automated methods, two areas are still causing confusion: (1) the choice between parsimony and consensus is not clear because neither method produced results that Morrone and Carpenter found conclusive; and (2) the available software could solve only problems involving a small number of taxa and areas.

Subtree Analysis and Area Paralogy

Area paralogy (redundant distributions) has been identified by Nelson and Ladiges (1996) as the source of apparent inconsistency in biogeographic data, as seen, for example, in the results of Morrone and Carpenter (1994). Basically, if a clade is older than the areas it inhabits, and several of its subordinate components exhibit congruent distributions across the same areas, these redundant patterns can be collapsed to yield a single hypothesis of area relationships (Fig. 8.8). The removal of paralogy, through what Nelson and Ladiges termed *subtree analysis,* appears to offer "improved" results. Improved, in the sense used here, implies: (1) the discovery of greater congruence among taxon-area cladograms,

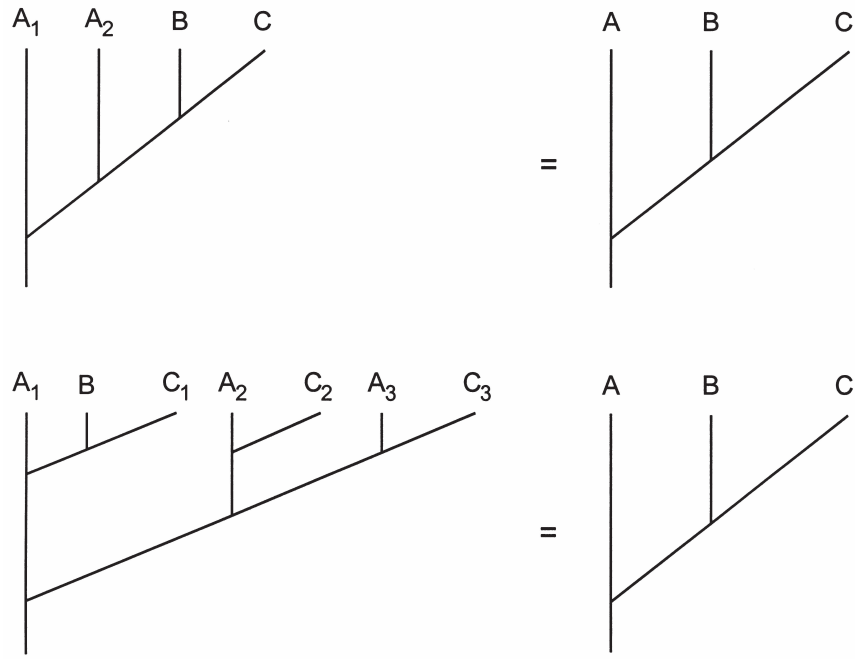

Fig. 8.8. Two examples of taxon-area cladograms with paralogous distributions, before and after subtree analysis. Subscripts represent the repetitive occurrence of different taxa in the same area (from Nelson and Ladiges, 1996).

(2) the ability to solve problems involving more than ten taxa and areas (including widespread distributions), and (3) the ability to analyze these larger data sets in a reasonable period of time.

Nelson and Ladiges (1996) coded matrices for their data in the form of components, following the approach outlined by Nelson and Platnick (1981) and as three-area statements (a biogeographical application of three-taxon statements; see Chapter 5). The results were analyzed using the Hennig86 and PAUP parsimony programs. The unsupported nodes produced by the programs were deleted through a node-by-node examination of the resultant general area cladograms. The dissection of complex area relationships into subtrees (some examples of which are shown in Fig. 8.8) and the analysis of the data with a parsimony program are responsible for the efficiency with which the results are produced.

Nelson and Ladiges (1996) demonstrated the utility of their approach by reanalyzing most of the data sets used by Morrone and Carpenter, which allows direct comparability between the results of the methods applied by the two sets of investigators. They also analyzed several large data sets, including those of Brundin (1966), Schuh and Stonedahl (1986), and Mayden (1988). Whereas Morrone and Carpenter often found multiple solutions, sometimes thousands, Nelson and Ladiges found one to a few solutions for the same data sets. The latter authors concluded that removal of paralogy from area cladograms allows for solutions to

complex problems and that the numbers of possible solutions is greatly reduced. The "assumptions" described above are no longer needed with subtree analysis, as ambiguity among distributions is removed by other means.

Criticism of Cladistic Biogeography

Cladistic biogeography is by its very nature concerned with forming connections among biotas with disjunct distributions. Craw (1982, 1983) criticized "cladistic" biogeography for being preoccupied with fragmentation, and therefore being incapable of providing a reliable analysis of the biotas of already composite areas. Polhemus (1996:63), without citing Craw, echoed the same sentiments, suggesting that

> Cladistic and vicariance biogeographers . . . developed methods that due to their reliance on dichotomously branching diagrams were best suited to the depiction of faunal patterns arising from continental fragmentation. . . . these methods have been notably less successful when applied to areas of continental convergence [and that] Present component and parsimony analyses that rely solely on dichotomous branching . . . are clearly insufficient tools for such investigations.

Both authors suggested that a single land area appearing in more than one pattern would represent failure of the method, presumably because of its being based on dichotomy and fragmentation. They used New Zealand, New Caledonia, and New Guinea as examples.

The complaints of Craw were interpreted by Platnick and Nelson (1984:331) as suggesting that "the geographic pattern exhibited by the preponderance of evidence would be accepted as real, and that conflicting real patterns shown by other taxa would be rejected as unreal (i.e., due to chance dispersal)." They indicated that no such assumptions had ever been made under the method, and that indeed, in the case of geologically composite areas, incongruence between general patterns would be expected.

Schuh and Stonedahl (1986) had shown New Guinea appearing in two places on a taxon-area cladogram, in one case relating New Guinea to tropical Asia and in the other case to continental Australia. Polhemus (1996) used this as an example of "the futility of attempting to search for a single area cladogram that will accurately represent the faunal relationships of an area in which arc collisions and subsequent composite terrains have been dominant influences." Nonetheless, Schuh and Stonedahl made it clear that the method would force the conclusion that New Guinea was of hybrid origin, although they did not try to resolve the problem of areas of endemism within New Guinea.

Event-Based Approaches

Panbiogeographers are not the only critics of cladistic biogeographic methods, as articulated by Rosen, Nelson, Platnick, Humphries, Parenti, and others. Foremost

among the alternate-school critics are Fredrik Ronquist and his colleagues, primarily Isabel Sanmartin. Their primary criticisms are that cladistic biogeography (1) assumes that there is a single branching pattern among areas and that the method is incapable of accounting for co-occurring lineages with different biogeographic histories, (2) assumes that the ancestral distributions of taxa are widespread, allowing only for subsequent fragmentation with no account of how the widespread distribution was achieved in the first place, (3) does not incorporate information on divergence times, (4) does not allow for statistical tests to assess the significance of historical biogeographic hypotheses, and (5) requires the a posteriori interpretation of events that led to observed distributions (see, e.g., Ronquist, 1997; Sanmartin and Ronquist, 2004; Sanmartin, 2007). Their recommended solutions to these perceived problems come in the form of what are usually called *event-based methods* of analysis.

Event-based methods in biogeography (and host-parasite coevolution) are the analog of maximum likelihood analysis in phylogenetics, in that they incorporate models as part of the analytical protocol. As stated by Sanmartin (2007), "Event-based biogeographic methods rely on explicit models with states (distributions of terminals) and transition events between states (biogeographic processes)." Different models assign different costs to different events. It cannot be asserted, however, that any of them are realistic portrayals of what may have actually happened in any particular situation.

Ronquist (1996, 1997) offered a description and algorithmic implementation of *dispersal-vicariance analysis* (DIVA). Like other event-based approaches, DIVA allows for the assignment of differential costs to different types of events, based on the "likelihood" of their occurrence. Like cladistic biogeography, all analyses are performed using a cladogram of taxon-area relationships for the group under study. The method does not require, however, a general hypothesis of area relationships. Vicariance (allopatric speciation) is assumed to be the primary driving force for diversification across a geographic range and, along with duplication (Sanmartin, 2007), is assigned a cost of 0. Dispersal events, which are assigned a cost of 1, are the result of adding a unit-area to the distribution of a taxon; extinction events, which are also assigned a cost of 1, are the result of removing a unit area from the distribution of a taxon. Analyses under DIVA incorporate the use of a three-dimensional matrix for the assignment of differential costs to separate event types. The cost under the DIVA model is computed for a single taxon-area cladogram.

Parsimony-based tree fitting (Page, 1994; Ronquist, 2003a, b), like DIVA, assigns costs to events. Some studies have suggested that optimal cost assignments are 0.01 for vicariance and duplication, 1 for extinction, and 2 for dispersal (Ronquist, 2003a; Sanmartin, 2007). Unlike DIVA, however, this is a two-step process. Costs are first computed for a set of taxa with an observed distribution. This involves optimization of distributional states on a cladogram under a given set of costs. The topology of that optimization is then fitted to a "general area cladogram" (GAC), the tree-fitting part of the process. The topology of the GAC might be from geology, from other taxa, or chosen from all possible topologies for a given set of areas. Whatever the source, the more areas involved, the more complex the solution.

The significance of the results in event-based reconstructions is established by comparing the observed costs of a given reconstruction with costs derived from permuted area relationships, where areas and/or taxa have no assumed historical association. This process is analogous to the calculation of PTP values in phylogenetic analyses.

Sanmartin (2007) has suggested, on the basis of her own empirical studies, that each of the two event-based methods described above has its own particular utility in historical biogeographic reconstructions. She argued that DIVA is most appropriate when the biogeographic history is reticulate, such as in the Northern Hemisphere, where a hypothesis of unique vicariant events does a poor job of explaining observed distributions. Sanmartin argued that tree-fitting methods, on the other hand, are more appropriate when there is a strong vicariant pattern, such as in the analysis of classic Gondwana distributions, of the type first dealt with in a cladistic context by Brundin (1966).

A large-scale analysis of Southern Hemisphere distributions was performed by Sanmartin and Ronquist (2004), with a large number of plant and animal distributions included in their data set. These authors used the program TreeFitter 1.2 (Ronquist, 2003b) to perform their analyses. Their results suggested that animals show a stronger signal of vicariance than do plants, and that that signal is correlated with geological scenarios relating to the breakup of Gondwana (Africa (New Zealand (southern South America, Australia))). Their results further suggested a lesser role for vicariance in the distribution of southern plant taxa, with the major pattern being (southern South America (Australia, New Zealand)). Because of the event-based nature of their analysis, they invoked dispersal across Antarctica as a significant factor in determining observed animal distributions.

The idea that plants have dispersed in the Southern Hemisphere is an idea that has gained some currency beyond the work of Sanmartin and Ronquist. Winkworth et al. (2002) reviewed a series of analyses that suggest relatively recent colonization and diversification by plant groups in New Zealand. Others, including Cook and Crisp (2005), have argued that the problem is with flaws in method, and that because of their shortcomings, tree-based [systematic] methods of analysis should be rejected in favor of process/likelihood based approaches. One can detect a desire to return to the pre-Brundin world in the writings of McGlone (2005) who argued for the primacy of dispersal as an explanation in a commentary piece entitled "Goodbye Gondwana." These critiques notwithstanding, phylogenetic studies continue to offer evidence for the strong connection between patterns of continental fragmentation and the topological relationships of taxa with little or no dispersal capability, such as the cyphophthalmid Opiliones (Arachnida) (Boyer et al., 2007).

Host-Parasite Coevolution

The observation that hosts and their parasites have evolved in concert is longstanding and was discussed extensively by Hennig (1966) under the heading of

"Fahrenholz's rule." The development of improved techniques for determining to what degree "coevolution" has actually occurred, however, has gone hand-in-hand with the development of biogeographic methods.

Hennig (1966:112) believed that the relationships of parasites contained much information of great value to understanding the phylogenetic systematics of host taxa, but he lamented the unsatisfactory state of its theoretic basis. He asserted that "Even the most extreme advocates of the thesis that the phylogeny of the parasites usually parallels the phylogeny of the host (in the sense of Fahrenholz's rule) do not assume that the parallelism is so close that every process of speciation in the one corresponds to a process of speciation in the other" (Hennig, 1966:111). This statement clearly suggests a parallel with historical biogeography.

Host-parasite comparisons benefit from the fact that both hosts and parasites exhibit patterns of relationships that can be inferred from intrinsic character data (i.e., both are subject to phylogenetic analysis in their own right). Thus the problem of "homologous taxa" does not arise, as it does with areas of endemism. The similarities between host-parasite relationships and biotic distributions might be listed as follows:

1. The hosts are equivalent to the "areas," and speciation events in the hosts act as vicariant events for the parasite taxa.
2. Some hosts may have no parasites, the equivalent of certain taxa being absent from certain areas.
3. Some parasite species may occur on more than one host, the equivalent of widespread distributions.
4. Some hosts have more than one parasite species, the equivalent of redundant distributions.

Brooks (1981) explicitly treated the analysis of phylogenetic relationships of multiple parasites on a single group of hosts as a way of establishing (testing) the relationships of the hosts themselves. His approach used the parasite relationships as character data, and assumed that with multiple parasites signal would overwhelm noise and a corroborated answer would result, showing a correct host cladogram based only on cladograms of parasites. Most subsequent authors have not followed Brook's approach and have avoided a priori assumptions about coevolution. Rather, they have more frequently used consensus techniques to compare cladograms of hosts and parasites as a way of determining to what degree parasites have actually evolved in parallel with their hosts.

As a first example of such congruence-based studies, let us examine the work of Farrell and Mitter (1990) on leaf beetles of the genus *Phyllobrotica* (Coleoptera: Chrysomelidae) and their hosts in the closely related flowering plant families Lamiaceae and Verbenaceae. These authors constructed a cladogram for the 14 species of *Phyllobrotica* and two outgroup taxa. They also constructed a scheme of relationships for the hosts, based on the best estimates available in the literature. They then compared the topologies of the host and parasite cladograms, excluding from the comparison those five beetle species for which no host information was

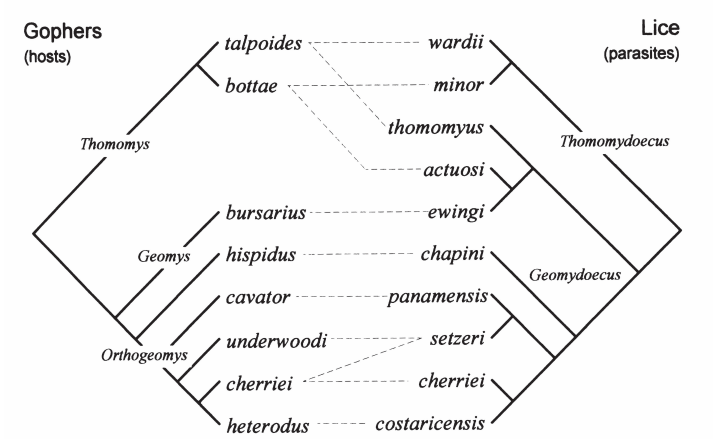

Fig. 8.9. Phylogenetic relationships of pocket gophers and those of their louse parasites compared. Dotted lines indicate relationships of the hosts and their parasites (from Page, 1994: fig. 9).

available. Farrell and Mitter calculated the consensus and the Adams compromise for the two cladograms. They considered the Adams' result superior to the strict consensus for comparisons of this type because it allowed that "both parallel phylogenesis and host transfer may contribute to a given set of insect/plant interactions." In the Adams' result, six of the eight possible groupings were resolved, suggesting a high degree of parallel diversification between the lamialean hosts and chrysomelid parasites.

As a second example, let us consider work on coevolution between pocket gophers and their louse parasites as originally conducted by Hafner and Nadler (1988, 1990) (Fig. 8.9). The data were reanalyzed by Page (1990b, 1994), who included substantial observations on methods for seeking congruence between host and parasite phylogenies. The objects of this study were eight species of pocket gophers in the genera *Geomys, Orthogeomys,* and *Thomomys* (Rodentia: Geomyidae). They are the hosts of 10 species of chewing lice belonging to the genera *Geomydoecus* and *Thomomydoecus* (Insecta: Phthiraptera). Hafner and Nadler identified six components common to the two phylogenies and postulated three instances of dispersal to explain the remaining louse distributions. Page reanalyzed the data of Hafner and Nadler to determine whether or not they had identified the maximum number of cospeciation events. He found that they had but concluded that the anomalous distributions could be explained alternatively as the result of sampling error and extinction. Under further analysis, Page concluded that rather than two parsimonious scenarios for the coevolution of relationships for the pocket gophers and their lice, there were actually six, but that the maximum number of cospeciation events was always six, and the differences among the schemes concerned alternative explanations for incongruence between the lice and their hosts.

Some further examples of phylogenetic coevolutionary studies include termites and attine ants and their respective fungal symbionts (Mueller et al., 1998; Aanen et al., 2002); birds and lice (Johnson and Clayton, 2003; Smith et al., 2004); histricognath rodents and their pinworms (Hugot, 2003), and evolution of mimicry in *Heliconius* butterflies (Brower, 1996).

Suggested Readings

Crisci, J. V., L. Katinaa, and P. Posadas. 2003. *Historical Biogeography, an Introduction.* Harvard University Press, Cambridge, Massachusetts. [A review of methods and approaches in historical biogeography]

Ebach, M. C., and R. S. Tangney (eds.). 2008. *Biogeography in a Changing World.* CRC Press, Boca Raton, Florida. [A collection of papers on current approaches in biogeography]

Humphries, C. J., and L. R. Parenti. 1999. *Cladistic Biogeography: Interpreting Patterns of Plant and Animal Distributions.* Oxford University Press, Oxford. 187 pp. [A concise but thorough treatment of background and method]

Lomolino, M. V., D. F. Sax, and J. H. Brown (eds.). 2004. *Foundations of Biogeography. Classic Papers with Commentaries.* University of Chicago Press, Chicago. [A broad cross-section of classic papers in biogeography]

Morrone, J. J., and J. V. Crisci. 1995. Historical biogeography: introduction to methods. *Annual Review of Ecology and Systematics* 26:373–401. [A review of methods in historical biogeography]

Nelson, G., and N. Platnick. 1981. *Systematics and Biogeography: Cladistics and Vicariance.* Columbia University Press, New York. 567 pp. [Historical review and detailed discussion of biogeographic methods]

Nelson, G., and D. E. Rosen (eds.). 1981. *Vicariance Biogeography: A Critique.* Columbia University Press, New York. 593 pp. [A collection of symposium papers, including discussion, dealing broadly with historical biogeography]

Page, R. D. M. (ed.) 2003. *Tangled Trees: Phylogeny, Cospeciation, and Coevolution.* University of Chicago Press, Chicago. 350 pp. [A collection of papers addressing relatively current issues in coevolution]

Sanmartin, I., and F. Ronquist. 2004. Southern Hemisphere biogeography inferred from event-based models: plant versus animal patterns. *Systematic Biology* 53:216–243. [A large-scale study of Southern Hemisphere distributions using event-based methods]

9

Ecology, Adaptation, and Evolutionary Scenarios

In Chapter 8 we examined issues that fit broadly under the umbrella of coevolution but more specifically under the restrictive subset of phenomena often referred to as cospeciation. The methods of testing theories of cospeciation are not well suited for testing coevolutionary theories of ecological association, adaptation, and more loosely constrained patterns of host association. It is, nonetheless, desirable to evaluate such theories in a rigorous historical context. Indeed, the ability to use the results of cladistic analyses to evaluate ecological and adaptational theories represents a truly powerful application of the method. This area of inquiry has been the subject of several books and review articles (see Suggested Readings). Two interrelated approaches have been proposed—mapping and optimization. We will review examples of the application of each.

This chapter describes methodological approaches that are best suited to what we refer to in this volume as *extrinsic data.* Our rationale is based on the desire to provide an independent test of theories about the evolution or association of attributes within individual lineages, when there is no straightforward way to produce a hierarchic scheme for those attributes. For example, what criterion of homology does one apply to ecological characters such as "entomophagous," "herbivorous," "ectoparasitic," and "sanguivorous on vertebrate blood"? Likewise, how does one homologize host associations—and particularly character adjacencies—in phytophagous insects, when a single monophyletic group may feed on such disparate plant groups as Fabaceae, Fagaceae, Ericaceae, Salicaceae, and Sapotaceae (Schuh, 2006)?

No doubt, our approach is not the only one that might be taken. Indeed, Miller and Wenzel (1995) saw no problem with coding ecological and other "extrinsic" characters alongside intrinsic features, and described in detail methods and justifications for doing so. But, we argue that, whereas including such data in a character analysis may well offer a broader sample of evidence, the use of the resulting phylogenetic theory as an independent test of the nature and sequence of "ecological" or other changes with a lineage cannot be viewed as independent of the analysis itself and therefore offers a somewhat tautological test of such theories.

Information on geographic distributions is certainly "extrinsic," and the nature of state associations between areas of endemism cannot be defined through the use of homology criteria specified in Chapters 3 and 4. Nonetheless, the analysis of distribution patterns still seems to fit under the coevolutionary model because the comparisons are being made among multiple hierarchic schemes, all of which are derived from cladistic analyses, the subject matter of Chapter 8. The situations examined in the present chapter, however, all involve the distribution of traits within single lineages rather than comparisons among lineages.

Evolutionary Scenarios and Their Tests

The acquisition of novel attributes and associations over evolutionary time has long fascinated biologists. Views on the how, when, and why of such acquisitions have often been expressed in the form of scenarios. For example, arachnologists long held the view that the orb web evolved twice from a cobweblike structure because of its superior prey-catching ability (Coddington, 1988). Although such statements might be viewed as hypotheses to be tested, they have frequently been propounded as if testing were irrelevant or as if their truth was self-evident. Whatever the intention of the authors of such claims, many such scenarios are subject to test via knowledge derived from systematic studies. In other words, by testing ideas in a systematic framework, we might come to some understanding of whether an idea represents mere assertion or whether available data actually support it. Such tests have provided a fruitful demonstration of the relevance of systematics to areas of biology such as ecology and animal behavior, where it has been ignored in the past.

Corroboration, or testing, of evolutionary scenarios might be divided into two broad approaches: (1) *cladistic methods,* which provide a way of understanding the sequence of ecological and adaptive changes; or (2) *statistical techniques,* which are used to test theories of adaptation with uncorroborated cladograms or nonphylogenetic classifications uncritically employed as standards of comparison (Crisp, 1994). We will examine the former approach in some detail. The latter approach, whose base of inquiry is rooted in ecology rather than in systematics, has been promoted under the banner of "the comparative method" by Harvey and Pagel (1991), Martins (1996), and others. These authors see phylogenetic relationship as a source of bias or a nuisance parameter to be factored out of the study of adaptation. That perspective will not be covered here.

Mapping

Once a cladogram is available, the distribution of attributes among the terminal taxa can be understood explicitly. Any character included in the cladistic analysis can, of course, be traced on the cladogram to reveal patterns of shared ancestry of alternate states, independent gains, and reversals. Certain morphological

attributes, for example loss of legs in various squamate lineages, may be revealed as homoplastic features that have multiple origins. In addition, ecological associations and other extrinsic characteristics not used in the phylogenetic analysis can be "mapped" onto a cladogram as a way of understanding the number of origins, the sequence of origin, and the presumed ancestral conditions of those features as well. The procedure is analogous to the method used for biogeographic analysis described in Chapter 8. We remind the reader, as discussed in Chapter 6, that the best supported phylogenetic hypotheses are those derived from simultaneous analysis of all relevant evidence (but not extrinsic characters). We therefore emphasize the difference between the approach described here and the hubristic view of certain boosters of molecular systematics who espouse the notion that "phylogenies" should be based on molecular data, and that morphology, due to its supposed fickle adaptive nature, should be mapped onto those trees (see, e.g., Gould 1985; Hedges and Maxson, 1996; Avise, 2006). Such an approach strikes us as fundamentally wrong-headed, for two reasons: (1) the legitimacy of molecular systematics is derived from its almost universal corroboration of hypotheses of relationships based on morphology; and (2) there are strong arguments for analyzing all relevant data simultaneously, as we have discussed in Chapters 2 and 6.

Mapping of the adaptive consequences of life-history strategies was used by Mitter et al. (1988) to test the widely invoked—but seldom tested—hypothesis that "diversification is accelerated by adoption of a new way of life, i.e., movement into a new adaptive zone." Mitter et al. mapped the feeding habits of major clades of insects onto cladograms of those groups, and compared the numbers of known species in adjacent clades. Their results showed that in 11 out of 13 comparisons, the phytophagous lineage was substantially more diverse than its nonphytophagous sister group, suggesting that evolution of phytophagy promotes diversification in insects.

Some monophyletic groups of phytophages are known to maintain strict associations with a particular host group. This is not the case with many groups, however, nor does it obtain at higher levels of relationship. Because there is no test available to determine homology and state order for such extrinsic characters, mapping is the only way to understand the sequence of change. Miller (1987) used mapping to demonstrate that patterns of larval food-plant association in the swallow-tail butterflies of the family Papilionidae were often not tightly constrained at the tribal or generic level (Fig. 9.1). Nonetheless, he concluded, on the basis of the patterns of evidence, that host switching in the Papilionidae is probably constrained by plant chemical compounds.

Mapping was used at the species level by Futuyma and McCafferty (1990) in their examination of host relationships of the chrysomelid beetle genus *Ophraella* and its association with members of the plant family Asteraceae. Although the beetles are restricted to one plant family, critical analysis showed no clear patterns of cospeciation between the beetles and the eight genera of Asteraceae which serve as their hosts. The authors concluded that host shifts by the beetles postdate

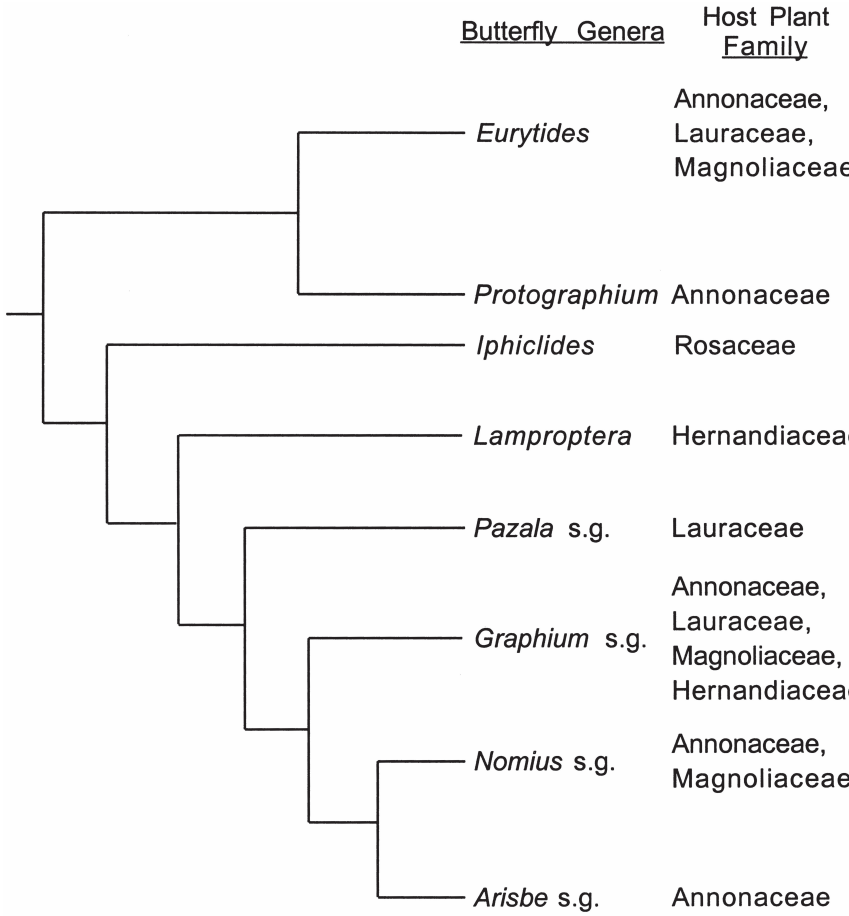

Fig. 9.1. Cladograms comparing phylogenetic relationships among genera of the tribe Graphiini (Papilionidae) and host plant associations within the group (Miller, 1987). Comparison shows not only that different butterfly lineages feed on the same host group but also that some butterfly lineages feed on multiple host groups. Thus, we must assume multiple colonizations or losses of association with some plant groups.

the divergence of the host plants. Similar studies have been performed for several butterfly groups (Brower, 1997; Weingartner et al., 2006; Penz, 2007).

Mapping has also been used to analyze the historical origins of traits that are at least in part genetically determined. As one possible example, Andersen (1997) studied the evolution of flightlessness and wing polymorphism in insects generally, the suborder Heteroptera, and the family Gerridae in particular. Within the Gerridae, these features are determined by a combination of genetic and environmental factors. Andersen found that patterns were difficult to discern at the level of insect orders, probably because the nature of the condition is difficult to define.

Within the Gerridae, however, his analysis produced the "unexpected" conclusion that—contrary to popular conception—the ancestral condition for the wings is not always monomorphic macroptery (fully developed functional wings). Andersen's analysis revealed that within the Gerridae, wing dimorphism (fully winged forms and those with reduced wings and flight musculature) is primitive, with monomorphic macroptery being a secondary acquisition. As can be seen from Fig. 9.2, Andersen's analysis permits determination of the ancestral condition for nodes on the cladogram, but on a less rigorous basis than would be the case under the "optimization" approach described below. In an analogous study, Whiting et al. (2003) showed that wings in stick insects appear to have re-evolved from wingless ancestors at least four times within the order. They mapped the presence or absence of wings on a cladogram based on nuclear ribosomal RNA and histone gene sequences. Subsequent controversy over the optimization of wing losses versus gains is a good example of the effect of asymmetrical character-state transformation costs (Trueman et al., 2004; Whiting and Whiting, 2004).

In another case, Wenzel (1993) examined congruence between behavior and morphology. His study group comprised 23 of the 28 generic-level taxa of the paper wasp subfamily Polistinae. Wenzel treated the attributes of nest architecture as behavioral characters. Although we have argued that behavioral characters can be treated as intrinsic information and therefore used as part of a "total evidence" analysis, Wenzel chose to construct a cladogram solely on the basis of behavioral traits to examine the degree to which those attributes produced a scheme congruent with one based on morphology. His comparison of the two schemes is shown in Fig. 9.3, revealing a substantial degree of congruence. He also optimized his "architectural" data directly onto the morphology-based cladogram of Carpenter (1991), a process that revealed a consistency index of 56 percent for the architectural data, compared with 48 percent for the morphological data on which the cladogram was originally based. Wimberger and de Queiroz (1996) surveyed a variety of studies employing behavioral characters and showed that patterns of homoplasy in behavioral versus morphological characters like those discovered by Wenzel are common.

Some groups of Australian papilionoid legumes are bird pollinated, whereas others are pollinated by bees. Crisp (1994) used cladistic methods to determine the origins of bird pollination among them. The groundwork for understanding bird pollination was laid in revisionary works by Crisp and Weston in their analyses of relationships among the 30 genera belonging to the endemic Australian papilionoid tribe Mirbelieae. On the basis of floral morphology, Crisp concluded that bird pollination had arisen independently at least five times within the Mirbelieae. Crisp conducted a more detailed study of the *Nemcia* clade, with three nominal genera, all of which contained bird-pollinated species. He discovered, as shown in Fig. 9.4, that bird pollination had arisen twice in this primitively bee-pollinated group and that the genus *Nemcia* of prior classifications was paraphyletic. To test his results, Crisp calculated cladograms for the legumes using only characters not associated with bird pollination, and retrieved the same results, offering evidence

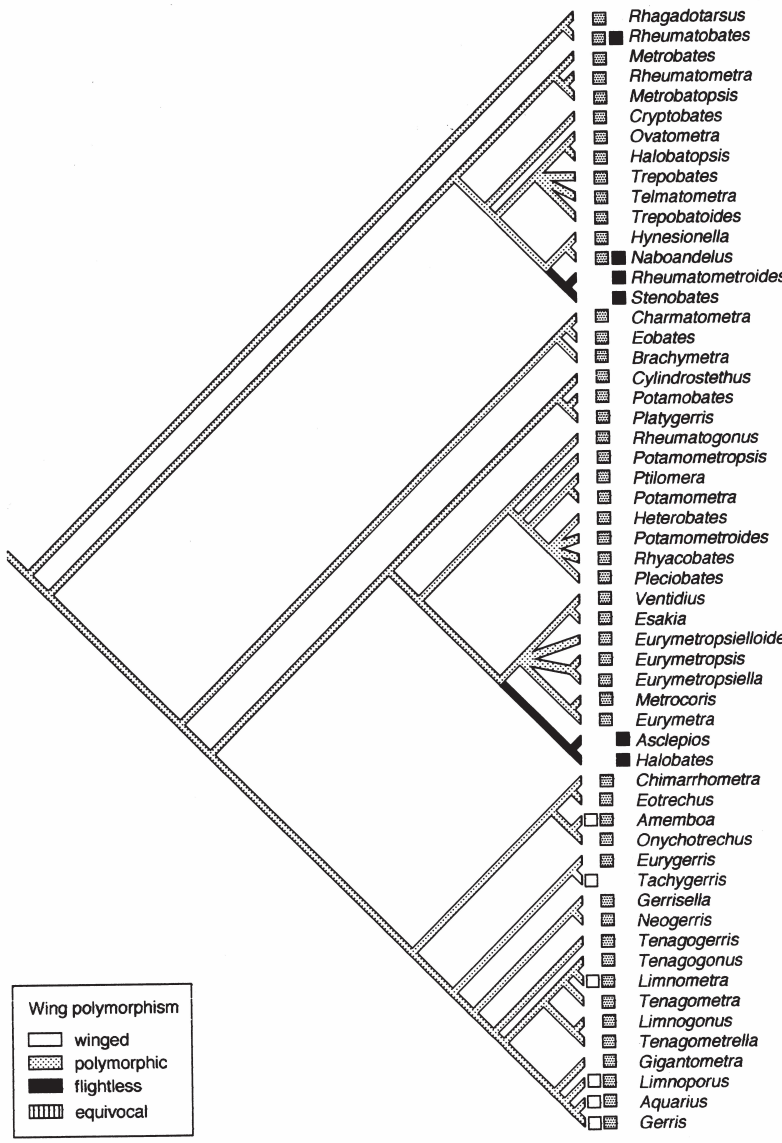

Fig. 9.2. Mapping flightlessness on a cladogram of generic relationships within the Gerridae (Andersen, 1997:98), showing the widespread and apparently primitive nature of wing polymorphism, and the relative rarity of occurrence and fixity of flightlessness and permanent macroptery (fully developed functional wings).

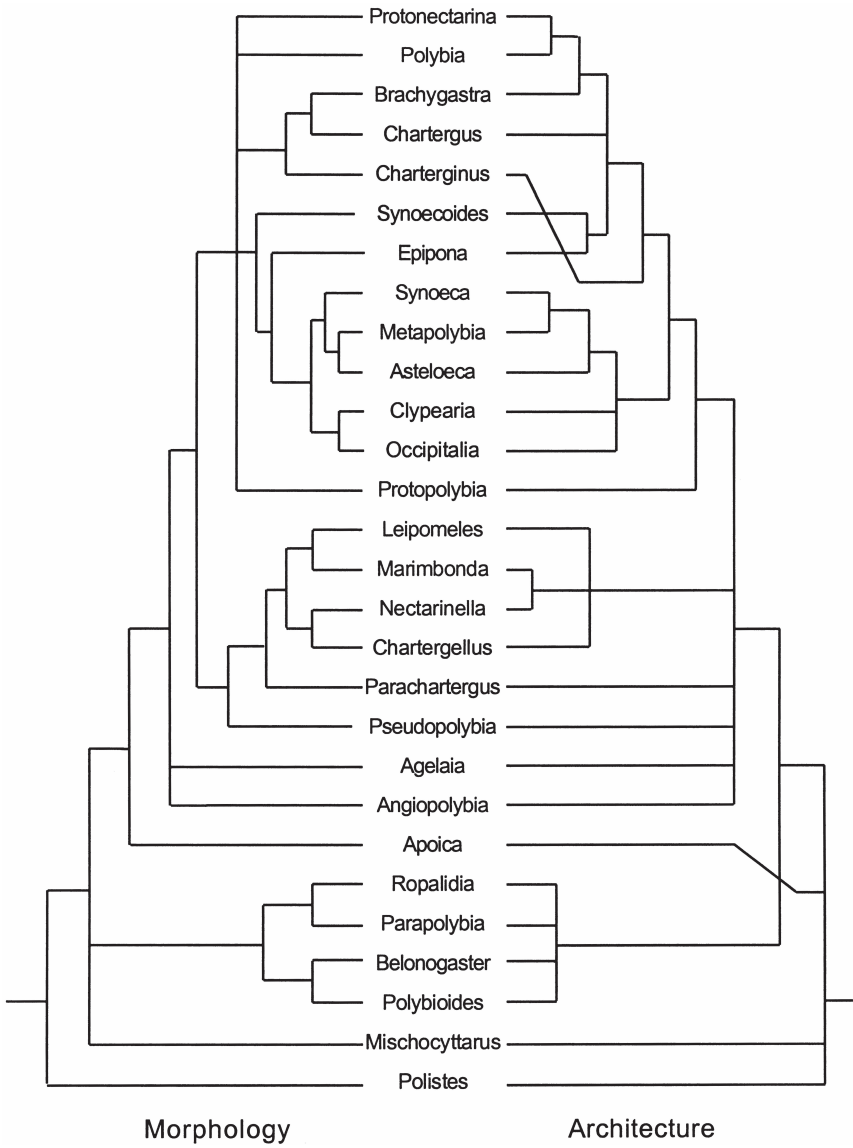

Fig. 9.3. Comparison of cladograms based on morphology (left) and nest architecture (right) for the paper wasp subfamily Polistinae (from Wenzel, 1993).

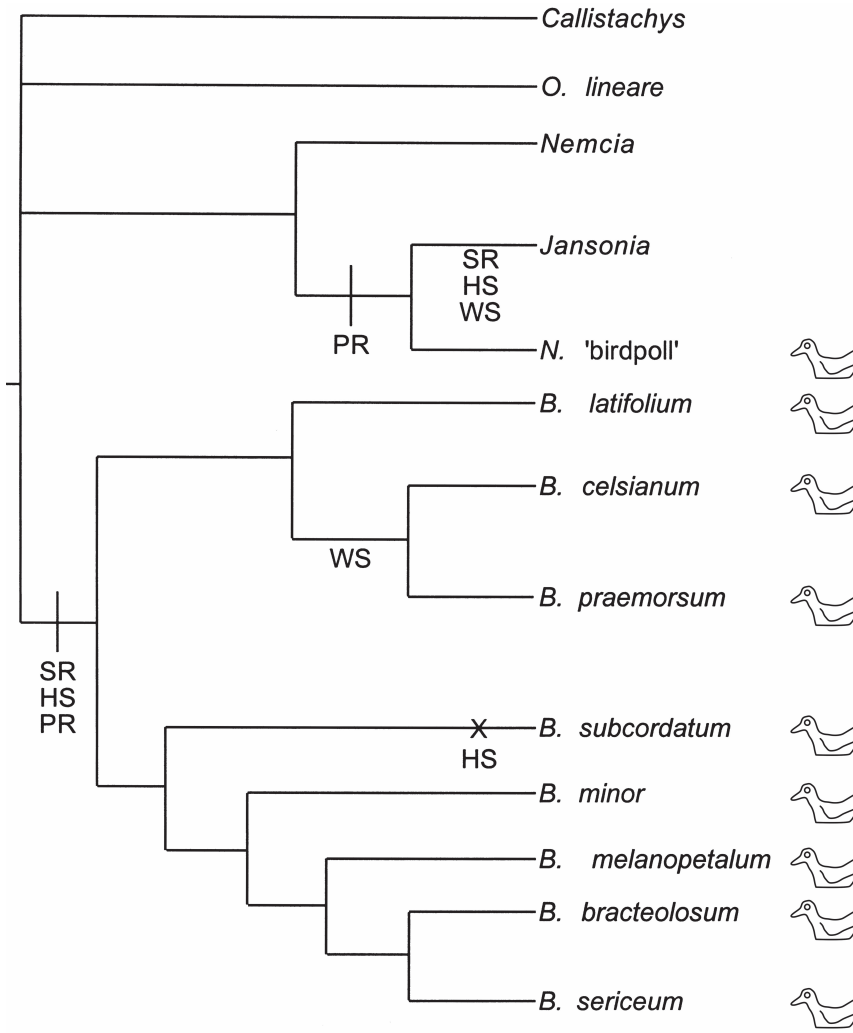

Fig. 9.4. The cladistic analysis of Crisp (1994), showing two independent origins of bird pollination in the Australian papilionoid legume tribe Mirbelieae and the paraphyletic nature of the genus Nemcia. *B* = Brachysema; SR = standard reduced, shorter than keel; HS = habit scandent; PR = petals red; WS = wings shorter than keel. The bird symbol indicates the presence of bird pollination in a group.

for the independence of his conclusion concerning the number of origins of bird pollination.

Optimization of Hypothetical Ancestral Character States

In Chapter 5, we discussed character optimization in the context of discovering most parsimonious (or otherwise optimal) trees. As introduced in Chapter 4, the

term *optimization* is also employed to refer to the inference of the state exhibited at internal nodes in a cladogram, which can be of interest in the development of evolutionary and coevolutionary scenarios. Most of the time, the states of internal nodes are unambiguous on a given tree: if terminal sister taxa share the same state, then the most parsimonious state for their hypothetical ancestor is the state they share. Ambiguity among alternate equally parsimonious optimizations arises when adjacent terminals or groups of terminals exhibit different states. Farris (1970) proposed—and Swofford and Maddison (1987, 1992) elaborated—a method for calculating internal states that has been implemented in software such as MacClade (Maddison and Maddison, 1992) and WinClada (Nixon, 2000).

The basic method for assigning character states to internal nodes with nonadditive data is to start at the terminals and work toward the base of the tree, using the state of the immediately distal nodes to assign a state to progressively basal ones. If the distal nodes differ in their states, then the basal node is designated as ambiguous for the alternate states. If one distal node is ambiguous but one of its possible states is shared by its sister node, then the basal node is resolved as the shared state. The "down-pass" phase is complete when the root of the tree is reached. Ambiguous nodes may often be resolved by reversing the process and performing an "up-pass," using the shared state criterion.

As discussed in Chapter 4, there are times when alternate equally parsimonious optimizations imply different states for internal nodes. Swofford and Maddison (1987) described two scenarios, accelerated and delayed transformation (*ACCTRAN* and *DELTRAN*), that characterize two ends of the spectrum of possible transformation events. Under accelerated transformation, state changes are hypothesized to take place as close to the root of the tree as possible, which tends to favor early gains of features with subsequent reversals. Delayed transformation, by contrast, hypothesizes transformations as occurring closer to the tips of the tree, thereby implying independent gains of features. De Pinna (1991) made the intuitive argument that losing a feature is easier than gaining one, and that therefore ACCTRAN should in general be favored. Agnarsson and Miller (2008) have questioned the universality of this assumption.

An example is helpful to illustrate these concepts. In his attempt to provide a rigorous test of a complex evolutionary scenario of wasp social behavior, Carpenter (1989) optimized hypothesized changes in social behavior in vespid wasps on morphology-based cladograms of the groups in question. His procedure was to first map observed behaviors on terminal taxa and then determine the optimal character-state set for the hypothetical ancestors of those groups. The approach allowed for critical examination of the sequence of the proposed stages in the evolution of social behavior, a theory that was derived outside of a phylogenetic context. A portion of Carpenter's example is shown in Fig. 9.5.

We have discussed the issue of the evolution of host associations in phytophagous insects on several occasions. Schuh (2006) used optimization techniques to evaluate patterns of host shifting in the *Phymatopsallus* group of genera (Heteroptera: Miridae) from the American Southwest. He first calculated the most

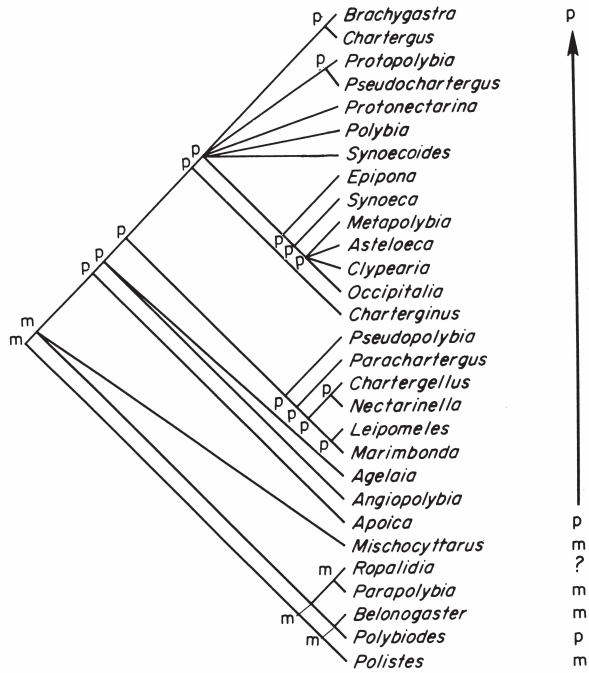

Fig. 9.5. Optimizing changes on the nodes of a cladogram of polistine vespid wasps. m = short-term monogyny; p = swarm-founding polygyny (Carpenter, 1989).

parsimonious tree for a group of 32 taxa. He then coded the host data as a single unordered multistate character, and determined the most parsimonious distribution of those data on the morphological cladogram. The results are shown in Fig. 9.6.

The mapping and optimization approaches described in this chapter may seem less precise or appear to deal with sloppier data than the coevolutionary approach described in Chapter 8. The diminished analytical complexity does not impugn the scientific value of the result, however. The patterns we observe among terminals, and the states we can assign to internal nodes, offer substantial predictive power about the habits and associations for members of groups yet to be collected or observed. This predictive power is the same as for attributes whose existence derives directly from inheritance.

Tests of Adaptational Hypotheses

From the selectionist view of evolution come theories predicated on the idea that selection for superior adaptations acts as the force for evolutionary change. Many such theories have not been subjected to rigorous testing but exist more in the realm of conjecture, and there are alternative explanations for the distribution

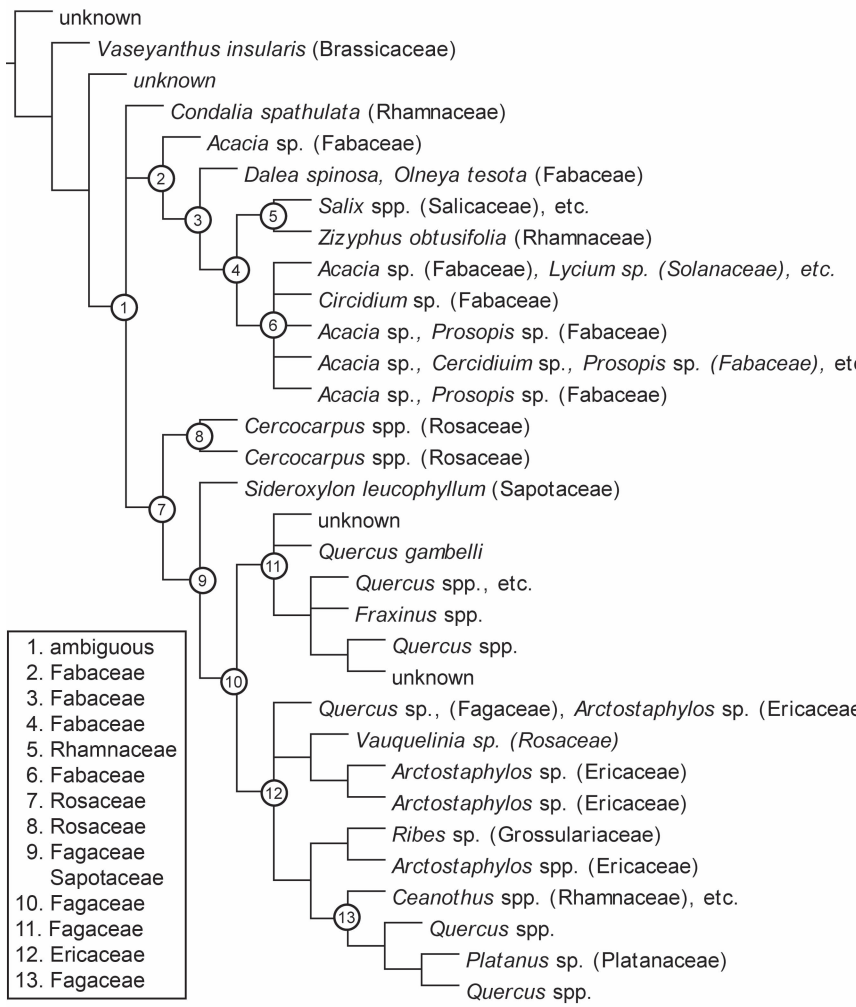

Fig. 9.6. The optimization of host associations on a morphology-based cladogram, with the host condition indicated for each of the nodes (adapted from Schuh, 2006).

of features among organisms that include phylogenetic constraint (Lewontin, 1978; Wanntorp, 1983). For example, for many years it was hypothesized that the enormous antlers of the Irish elk were the result of orthogenesis or runaway sexual selection. Gould (1974) showed that the large antlers could be explained simply as a result of an allometric growth relationship that holds among the Cervidae: small deer have disproportionately small antlers, while large deer have disproportionately large antlers. Thus, there is no need to invoke adaptive scenarios to explain the large antlers of the Irish elk.

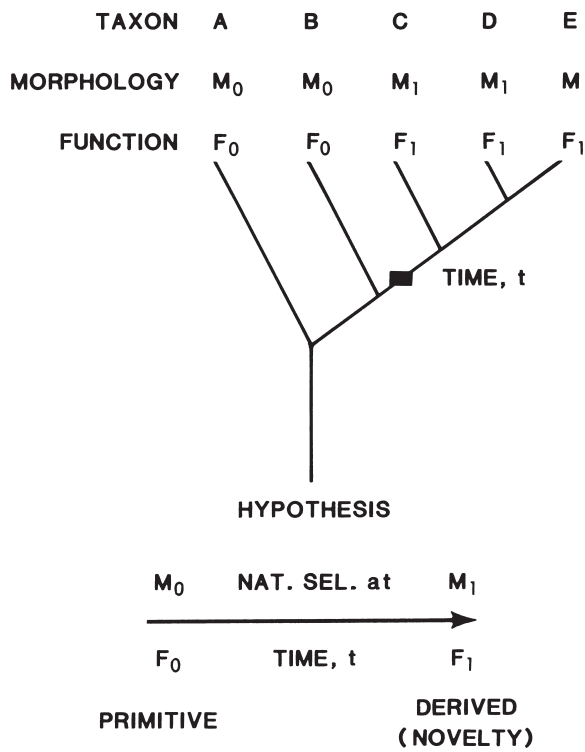

Fig. 9.7. The approach of Coddington (1988: fig. 1) for testing hypotheses of evolution through adaptation. M = morphology; F = function; subscripts indicate direction of hypothesized change.

Coddington (1988) proposed an approach utilizing cladistic methods to test adaptational hypotheses. The requirements of his approach, portrayed in Fig. 9.7, demand that cladograms be inferred for the group being studied on the basis of attributes other than those involved in the hypothesis of adaptation. Also included is the necessity of a specified relationship between form (morphology, M) and associated adaptation (function, F), as well as the stipulation of transformation from primitive (ancestral) to derived. One of the hypotheses tested by Coddington was that mentioned at the beginning of this chapter, that orb webs evolved twice from cobwebs. Coddington showed that in fact orb webs are ancient, had only evolved once, and that cobwebs are advanced relative to orb webs, not vice versa. Coddington's exclusion of the "adaptive" character under test from the analysis has been criticized from the "total evidence" perspective (e.g., Deleporte, 1993; Wenzel and Carpenter, 1994; Zrzavý, 1997; Kluge, 2005; see Chapter 6). Even if the character were included in the analysis, it is doubtful that a single character with two states would change the resultant topology. Indeed, the traditional "two gains"

and Coddington's gain and subsequent loss scenarios are alternative optimizations of equally parsimonious distributions of the character, each requiring two steps.

The mapping and optimization approaches described above allow us to structure our understanding of extrinsic attributes in light of the best available theories of phylogenetic relationships. These extrinsic data may or may not have been construed under some prior theory of relationships for the taxa exhibiting them. Nonetheless, the type of adaptational theories discussed by Coddington imply theories of relationships. Such theories will survive testing only if they conform to the requirements specified by Coddington and also conform to the independently derived phylogenetic theory.

Suggested Readings

Brooks, D. R., and D. A. McLennan. 1991. *Phylogeny, Ecology, and Behavior. A Research Program in Comparative Biology.* The University of Chicago Press, Chicago. 434 pp. [A relatively strong introduction to cladistics, with analytic tools for ecology and adaptation, biased toward the use of parsimony rather than congruence]

Eggleton, P., and R. Vane-Wright (eds.). 1994. *Phylogenetics and Ecology.* Linnaean Society Symposium Series. No. 17. Academic Press, London and San Diego. 376 pp. [Papers on the application of cladistics in understanding ecological issues]

Grandcolas, P. (ed.). 1997. The Origin of Biodiversity in Insects: Phylogenetic Tests of Evolutionary Scenarios. *Memoires Du Museum National Dhistoire Naturelle,* Paris, vol. 173. [Discussions of methods and empirical tests of evolutionary scenarios]

Harvey, P. H., and M. D. Pagel. 1991. *The Comparative Method in Evolutionary Biology.* Oxford University Press, Oxford. 239 pp. [A relatively weak treatment of cladistics, with analytic tools tending toward the statistical]

Lewontin, R. C. 1978. Adaptation. *Scientific American* 239:213–230. [Not systematics, but a classic paper discussing the problems of adaptation and adaptationism]

Miller, J. S., and J. W. Wenzel. 1995. Ecological characters and phylogeny. *Annual Review of Entomology* 40:389–415. [A review of relationship and use of ecological data in phylogenetic analysis]

Rose, M. R., and G. V. Lauder (eds.). 1996. *Adaptation.* Academic Press, London and San Diego. 511 pp. [A collection of reviews and case studies from a variety of perspectives]

10

Biodiversity and Conservation

Increasing awareness of the diminishment and degradation of natural habitats on a global scale has brought the study of "biodiversity" to a new level of intensity. *Biodiversity,* as the term is currently used, has many meanings, and its study ranges broadly across biology. There are, however, aspects of biodiversity that are strictly systematic, including (1) enumeration of the world's biota and (2) determination of historical relations—both genealogical and geographical—among members of the biota. These types of information can be used directly to inform our efforts for staving off continuing extinction at the hand of the human species. It is these areas that are the subject of this chapter.

Enumeration

Linnaeus, the eminent eighteenth-century Swedish naturalist, took upon himself between 1740 and 1767 the task of describing the world biota, at least as he knew it. We now well know that a complete enumeration of all living species may never be achieved, no matter the number of workers performing the task. Nonetheless, we should not give up on the effort because much of importance remains to be learned. We might mention, among other possibilities, the following areas impacted by improved knowledge of the world's biota: the functioning of ecosystems, human health, agriculture and other aspects of food production, discovery of natural products, and conservation decision-making.

Estimates for the total numbers of species of living organisms range from 2.5 million to about 30 million, depending on who is doing the calculations and what criteria they apply. Whatever the number, one thing is certain: Large numbers of species remain unstudied, even at the most basic level of describing and naming them so as to formally recognize their existence.

Certain aspects of current knowledge of the world's biota may in some ways seem counterintuitive. For example, the insect fauna of Europe is extremely well known. The description of a new European species might be considered an important event. By comparison, the insect fauna of North America is not nearly so well

known. Not that it should not be, given the potentially immense resources available for science in the United States and Canada. Yet, large numbers of species remain undescribed, and some groups, particularly in the western United States, have never been studied in detail.

Even with the existing limitations of knowledge of the North American fauna, the temperate Northern Hemisphere is extremely well known compared with the tropics and the temperate Southern Hemisphere. The biota of Australia may be least well known, but other areas are in desperate need of study as well. Some examples may provide some perspective on the scale of the problem. Within the family Miridae, 2000 species have been described from North America north of Mexico (Henry and Wheeler, 1988). One might surmise that when the North American fauna is "completely" known, that number might increase by as much as 15 percent. Australia, with a comparable land area, has a currently described fauna of approximately 200 species (Cassis and Gross, 1995; Schuh, 2008). The number of species actually existing in Australia is certainly not 200, however. The authors of the Insects of Australia (CSIRO, 1991) estimated the number at 600, although this number is certainly much too small, judging from specimens available in collections and from the ongoing work of the Plant Bug Planetary Biodiversity Inventory Project of R. T. Schuh and G. Cassis (http://research.amnh.org/pbi/). One might conclude that, whereas approximately 15 percent of the North American species remain to be described, no more than 8 percent of the Australian species have been described.

In the butterflies, arguably the best-known group of insects and among the best-known non-tetrapod organisms in general, there are huge numbers of species awaiting description. A recent catalog of Neotropical butterflies (Lamas, 2004) indicated hundreds of "n. spp."—taxa recognized as distinct but not yet formally described, particularly among the hairstreaks and pronophiline satyrines. There is little doubt that many additional species remain to be discovered in the field. A recent molecular study (Hebert et al., 2004) purported to reveal "ten species in one" by examining hundreds of individuals of the skipper butterfly "species" *Astraptes fulgerator* from a single site in Costa Rica (see discussion of DNA bar coding, below). Comparable numbers could be repeated for many groups of insects, other arthropods, and other nonvertebrate animals.

The situation for most groups of insects might also be compared with that for flowering plants. In North America the discovery of new species of angiosperms would probably be considered newsworthy. There are several floras for North America and often multiple floras for the various "regions" within North America. By comparison, Australia and South America as yet have no complete flora, and large numbers of species of flowering plants remain undescribed.

Recent Approaches: The Changing Face of Biodiversity Knowledge

DNA Bar Coding

One approach to documenting "biodiversity" is the initiation of an ambitious program by Paul Hebert and colleagues (Hebert et al., 2003a, b) to obtain a 600

base-pair segment of the mitochondrial Cytochrome Oxidase 1 gene (mtDNA COI) from as many animals as possible and to use these data in the development of a standard for identifying unknown samples (other gene regions are employed for plants and fungi). This gene region has been used by molecular systematists and population geneticists since the early 1990s (e.g., Bogdanowicz et al., 1993; Brower, 1994; Sperling et al., 1994). The "innovation" of the bar-coding initiative is simply the industrial scale at which the project has been undertaken, and the shift from hypothesis-driven studies of particular taxa to an omnivorous effort to document "life" with a common-denominator molecule. If bar coding were successful, it could change the way undetermined specimens are identified, from the traditional consultation of experts in museums to automated queries of a sequence database. Needless to say, museum scientists have perceived bar coding, or at least the rhetoric with which it has been advocated, as a threat to systematics and have criticized it accordingly (Sperling, 2004; Will and Rubinoff, 2004; Ebach and Holdrege, 2005; Will et al., 2005; Prendini, 2005; Wheeler, 2005). Others have pointed out with empirical case studies that the mtDNA COI region is not necessarily isomorphic of species boundaries to the degree that its proponents have claimed (Meyer and Paulay, 2005; Brower, 2006a; Meier et al., 2006; Elias et al., 2007). Debate over the role of this rapidly expanding database is likely to continue as resources for systematic research become scarcer.

Planetary Biodiversity Inventories

Beginning in 1993 the U.S. National Science Foundation began funding large-scale collaborative projects under the heading of Planetary Biodiversity Inventories (PBI). The program had a strongly systematic focus, with the aim of documenting monophyletic groups of organisms with global distributions. Such studies have long been undertaken by systematists, in the form of generic revisions and world systematic catalogs, but seldom have resources been available to examine in detail groups comprising 1000–5000 species. Nor, one might argue, was the technology at hand to make available in a comprehensible format the vast amount of information that will inevitably result from such an effort.

To date, nine PBI projects have been funded, dealing with groups including catfishes, plant bugs, parasitic wasps, goblin spiders, parasitic tapeworms, slime molds, tomatoes and potatoes, malpigs, and spurges. All of these projects were independently conceived with their own view of how to best achieve the greatest taxonomic advances. The common thread has been using the Internet as a tool for the acquisition and dissemination of information. Approaches taken include Web-based systematic catalogs, specimen databases, digital libraries, image libraries, taxonomic descriptions, and interactive identification keys. We have already made reference to—and provided citations for—these types of Internet-based resources, particularly in Chapters 1 and 7.

Encyclopedia of Life: Beyond Web Integrators

There are several now well-known large-scale efforts to bring nomenclature, biological classification, and specimen data to the Internet, including Species 2000,

ITIS, and GBIF, among others. What has eluded most efforts up to now is the funding necessary to assemble—on the Web and on a truly grand scale—the kind of information being generated by the PBI projects mentioned above for all of life. This is the goal of the nascent Encyclopedia of Life (EoL). This foundation-funded effort is grandiose in its ambitions but remains quite rudimentary, fragmentary, and error-rife at the time of this writing. The primary objective, nonetheless, is to develop "web tools" that will allow for the assembly of *species pages* for all of life.

Species pages have long been the core of systematic revisionary studies. In the context of printed publications, they have usually consisted of information on nomenclature (a "synonymy"), a description, an enumeration of specimens examined, illustrations (including distribution maps), and commentary on other relevant biological information. When coupled with an appropriate classification, such Internet-based pages will offer a roadmap of knowledge of the world's biota. Not only can they include the traditional print information, but they can be continually updated, assembling a wealth of information in real time. They can also include pointers to other relevant information and greatly broaden the context in which information is accessed. Like all other efforts to assemble species-level information, the success of the EoL will to a great degree depend on the success of its recruitment of expert providers of content from the biological research community.

Tree of Life

Whereas the Encyclopedia of Life, DiscoverLife, and other similar Web sites are primarily species-based, the Tree of Life (ToL) looks at biodiversity information from a phylogenetic perspective. Thus, rather than starting at the tips of the branches in the phylogenetic tree, the ToL focuses on the internal nodes of the tree. Because phylogenetic hypotheses—beyond the level of classifications with limited hierarchic content—are available for only a limited number of higher taxa, the ToL will for some time lack detail in many areas of the tree. In addition, the ToL, like the EoL, depends on the cooperation of the broader systematics community for the contribution and assembly of relevant information. Whereas much discussion of biodiversity has focused on species diversity and richness, genealogical issues are nonetheless important, and it is in this area that the results of phylogenetic analyses and their assembly through sites like the ToL can gain importance, as we will discuss in the next section.

Historical Relations

Genealogical

Without the relatively complete enumeration of species, knowledge of phylogenetic relationships will always be limited. Yet, it is inference of this pattern of relationships that provides systematists with their most powerful tools. To believe

that empirically supported hypotheses of relationships exist for most groups of plants and animals would be naïve; for many taxa, as noted above, we barely even comprehend the scope of the problem. Furthermore, there is no obvious correlation between our knowledge of the species diversity of a group and the level of knowledge concerning the phylogenetic relationships of those species and the more inclusive groups to which they belong.

For example, the species-level diversity of mammals and birds is quite well documented. It is relatively rare that new species are described, and most of the intraspecific variants have been named, as well. Phylogenetic relationships among these taxa are not as well known as one might expect, however. We might say that ornithologists were distracted by the "new systematics" for most of half a century, during which time they devoted their efforts to examining population-level variation within birds, almost to the exclusion of studying higher-level relationships (but see Sibley and Ahlquist, 1990, on DNA hybridization). Only recently have large-scale phylogenetic hypotheses for relationships among higher groups of birds begun to appear (e.g., Hackett et al., 2008). Relationships among mammals may be better known; at the very minimum, the structure of relationships as currently understood at the generic level and above has been portrayed in detail by McKenna and Bell (1997), and there is an ongoing controversy regarding conflicting patterns of evidence supporting relationships among mammalian orders (e.g., D'Erchia et al., 1996; Gatesy et al., 1999b; Lin et al., 2002).

The above examples represent only a glimpse into where things stand. What seems clear is that without a substantially greater expenditure of effort, many species will never be recognized as existing, let alone studied at the level of phylogenetic relationships.

Geographical

Knowledge of historical biogeographic relationships is dependent on phylogenetic knowledge. The significance of the relationship between knowledge of genealogy and historical biogeography at a global level may be best appreciated by examining a critique by Platnick (1992). Platnick noted that traditionally theories of historical biogeographic relationships among animals have been dominated by studies of vertebrates. This domination can be portrayed by observing that a one-time widely used textbook of "zoogeography" by the entomologist Philip J. Darlington (1957) used vertebrates as the sole example organisms. Platnick further noted that studies of zoogeography have also been heavily weighted toward the Northern Hemisphere, creating what he referred to as the "boreal megafaunal bias." He emphasized that it is not just the tropics that contain large numbers of taxa compared to the Northern Hemisphere—as popular conception would have it—but that the southern continents in general deserve much greater recognition as centers of great biotic diversity, and therefore biogeographic importance. On the latter point, he stressed that areas of endemism in the far south often seem to be much smaller than in the Northern Hemisphere.

We might profitably extend Platnick's discussion to the issue of regional phylogenetic diversity. But first, let us augment some of Platnick's numbers. We can easily agree that the numbers of species in some areas of the Southern Hemisphere are virtually unparalleled anywhere in the world. As Platnick noted, the South African flora is made up of 15,000–16,000 species of flowering plants (Acocks, 1953). Western Australia should also be cited in this context, with an estimated 4000 species of flowering plants occurring in the Southwestern Botanical Province alone (Corrick et al., 1996), those species making up at least 20 percent of the Australian angiosperms, but occupying roughly 4 percent of the continental land area. By comparison, North America probably has no more than 9000 species of flowering plants, with no single area of the continent showing such conspicuously high diversity.

We might also wish to consider Southern Hemisphere diversity in plant-feeding insects. Data compiled by Zimmerman (1991–1994) for the weevils (Insecta: Coleoptera: Curculionidae) of Australia indicated an estimated 6000–8000 species in 1000 genera (with a very large proportion remaining to be described), whereas the North American fauna, by comparison, comprises 2500 species in 375 genera. Another example can be found in the work of Slater on the monocot-feeding lygaeoid family Blissidae (Heteroptera). The South African fauna comprises 66 species placed in 11 genera, these feeding on the monocot families Poaceae, Cyperaceae, Haemodoraceae, Juncaceae, and Restionaceae (Slater and Wilcox, 1973). The North American fauna, by comparison, contains only 26 species in 2 genera, these all feeding on the Poaceae (Slater, 1964). Yet, the land area of South Africa is less than 13 percent of that of North America. All of these observations offer support for the idea of higher diversity and smaller areas of endemism in the southern continents.

Southern floristic connections in groups such as the Proteaceae were well known in the time of Hooker and Darwin. However, it was the Swedish entomologist Brundin (1966) who first showed through the use of phylogenetic methods the detailed nature of the massive connections existing between the southern continents, exclusive of the northern biota. Whereas the type of pattern exemplified by Brundin's examples from the midges of the family Chironomidae involved the cool temperate portions of the Southern Hemisphere—presumably including Antarctica—tropical patterns also exist. For example, the plant bug tribe Pilophorini was shown by Schuh (1991) to demonstrate biotic connections between tropical South America, tropical Africa, and tropical Asia in its relatively more basal lineages, whereas only the relatively most derived lineages occur in the Northern Hemisphere, albeit with a large number of species. Viloria (2003) has hypothesized a connection between South American satyrine butterflies and those dwelling in New Zealand and Australia.

Discrete distributions and large numbers of clades often distinguish the biotas of the southern continents. By contrast the fauna of the Holarctic is often much more homogeneous, with many of the genera and species being relatively widespread. Some species, such as *Ursus arctos* (the brown and grizzly bears),

and *Biston betularia* (the peppered moth of industrial melanism fame) have Holarctic distributions. In a recent paper on biogeographic relationships within the Holarctic, Enghoff (1995), divided the Northern Hemisphere into only four areas: Eastern and Western Nearctic and Eastern and Western Palearctic. No matter how poorly this division reflects the actual number of areas of endemism, it nonetheless graphically reflects the degree to which many taxa have widespread distributions.

Conservation

How, then, can systematic, phylogenetic, and biogeographic information be used in conservation decision-making?

Hot Spots

Biodiversity *hot spots* were brought into the popular and scientific consciousness by Norman Myers (1988). He argued that the greatest threat to extinction of the earth's biota was in the tropical forests, and he identified 10 areas that he viewed as particularly susceptible. Subsequently, the number of hot spots has been expanded to 25 and the concept has received a formal definition. Indeed, hot spots have been adopted by Conservation International, the influential nongovernmental conservation organization, and have their own Web site, "Biodiversity Hotspots." They are the subject of a recent volume, which updates the concept and the nature of the currently recognized areas (Mittermeier et al., 2005).

The concept and significance of hot spots is straightforwardly synthesized in the abstract of an article by Myers et al. (2000) as follows:

> Conservationists are far from able to assist all species under threat, if only for lack of funding. This places a premium on priorities: how can we support the most species at the least cost? One way is to identify "biodiversity hotspots" where exceptional concentrations of endemic species are undergoing exceptional loss of habitat. As many as 44% of all species of vascular plants and 35% of all species in four vertebrate groups are confined to 25 hotspots comprising only 1.4% of the land surface of the Earth. This opens the way for a "silver bullet" strategy on the part of conservation planners, focusing on these hotspots in proportion to their share of the world's species at risk.

Whatever the strengths or weaknesses of "hot-spot science," there can be little doubt that the basic information at play comes from the field of systematics. Knowledge of species, their very recognition, has long been the core activity of taxonomy. Knowledge of species distributions, except possibly in the case of the charismatic megafauna, is likewise developed through the works of systematists. Furthermore, knowledge of rarity, range diminution, or extinction of a given species is fundamentally dependent on records of the distribution and abundance of

the species in the past. Such data are most readily and reliably available from museum collections.

Phylogenetic Information

Two nearly diametrically opposite approaches have been suggested, with a number of variants in between (e.g., Nixon and Wheeler, 1992), for using phylogenetic information in conservation decision-making.

Protect radiating lineages. Under this approach, lineages that appear to be radiating (speciating) on a dynamic basis would be those targeted for protection because they are the ones that would "create future biodiversity" (Erwin, 1991). The extreme application of this approach would be to treat lineages that are not radiating and therefore "doomed to go extinct" as expendable, and unworthy of efforts at protection.

Protect the most lineages. Under the "opposite" approach, absolute numbers of species would be deemed less important than the diversity of the lineages that those species comprise (Vane-Wright et al., 1991). Thus, ancient and species-poor phyletic lines are deemed more important than recent and species-rich lineages. Of course, such arguments are always tempered by the charisma of the taxa in question; otherwise we would devote most of our conservation efforts to preserving lineages of bacteria.

Example. The application of the latter approach can be appreciated by using the example of the tuatara of New Zealand, the sole surviving species (either one or two) of an otherwise long-extinct diapsid "reptilian" lineage (see May, 1990). If two species are actually represented, as taxonomic studies suggest, then it might be worth a concerted effort to protect them both because of their phylogenetic "uniqueness." If, on the other hand, such a conservation question involved one of many species of murine rodents (the largest group of mammals), the answer certainly would not be couched in terms of phylogenetic uniqueness, although it might be treated as an example of affording protection to a radiating lineage.

Biogeographic Information

Conservation decisions often involve determining if a given area should be protected or developed, irrespective of whether or not particular organisms of conservation concern might or might not occur there. In such cases, information on *endemicity,* the uniqueness of the area's flora and fauna, is usually assessed before any phylogenetic information is taken into account. The concept of surrogacy has taken on special significance in the biodiversity-conservation literature because complete biotic samples are time-consuming to collect and identify, and therefore usually not feasible. *Surrogacy* is the practice of choosing certain groups of organisms to be representative of the biota as a whole. This can be manifested as what we might call "transitive surrogacy," in which the diversity of group x is used

to infer the diversity of groups y, z, etc., and also what might be called "integral surrogacy," in which the diversity of higher taxa in a group is used as a measure of species diversity. To what degree surrogacy works may well be determined by the quality of choice or indicator organisms in each case under study. Knowledge derived from the study of biogeography would suggest that the concept should be used with care.

Consider, for example, transitive surrogate comparisons between flowering plants and insects. Australia may have slightly more than twice as many angiosperms as weevil species. It would certainly be much easier to sample the plant species for a given area than the weevils. Yet, nothing is known about the degree of correspondence between plant and weevil endemicity. Even if such a correlation were assumed, we still might not choose plants as the sole surrogate group because weevils may not be uniformly distributed across flowering plants as hosts. Furthermore, phylogenetically unique groups (of either plants or weevils) might not occur in areas of highest endemism.

A very coarse-scale approach to examining diversity was taken by Williams et al. (1994). In this case study, the families of seed plants were used as integral surrogates for an overall measure of species richness. The ultimate value of this approach may best be tested by determining to what degree it measures diversity when compared with results of applying the same higher-taxon approach to other groups of organisms. Bertrand et al. (2006) criticized the use of higher taxa as surrogates for species diversity on the grounds that Linnaean ranks above the species level are not comparable: Consider, for example, the 8000 or so species in the Class Aves with the 80,000 described species in the family Curculionidae. In general, the trouble with surrogacy is that its conclusions rest on assumptions that are either known to be false, because not all groups respond to vicariant events in the same way, or are untested and the tests of which would eliminate the need for surrogacy in the first place.

The above discussion provides a glimpse into the ways systematic information can be used in our efforts to protect and preserve the world's endangered biota. The refinement of approaches is a process in an active state of discussion and development. We might note, in closing, that even a complete knowledge of diversity, phylogenetic relationships, and endemism would not guarantee that decisions about conservation would be made on the basis of science.

Mapping and Distributional Predictions

In Chapter 7 we discussed the creation of extensive georeferenced specimen databases, many of which are available on the Internet through exclusive portals or aggregation sites such as GBIF, DiscoverLife, and others. These databases have greatly facilitated aspects of the taxonomic process and have virtually limitless applications in the fields of conservation and biodiversity assessment, and for tracking and predicting distributional changes.

At the same time that databases have been proliferating on the Internet, so has the ability to map the data found in them. Australia's Virtual Herbarium, mentioned in Chapter 7, uses outline maps to plot distributions of taxa on its public site. The ease of use of Google Earth as an interactive tool has allowed for its incorporation into several sites, providing rapid mapping on high-resolution images of the earth's surface. Sites such as DiscoverLife use a combination of satellite imagery and topographic maps to rapidly plot tens of thousands of points in real time, with a click of any given point revealing the specimen data from which it was plotted.

The ready availability of a wide variety of base maps now allows for plotting distributions against environmental variables such as rainfall, temperature regimes, vegetative cover, and others. Such approaches have greatly increased the accuracy with which actual distributions can be predicted relative to known distributions.

The use of ecological niche models has burgeoned, and in the view of some investigators holds great promise for the prediction of distributions. This is a subject beyond the scope of the present volume, but one for which there is now a large and ever-growing literature.

Suggested Readings

Forey, P. L., C. J. Humphries, and R. I. Vane-Wright (eds.). 1994. *Systematics and Conservation Evaluation.* The Systematics Association Special Volume No. 50. Clarendon Press, Oxford. [A collection of papers related to systematics and conservation]

Gaston, K. J. (ed.). 1996. *Biodiversity: A Biology of Numbers and Difference.* Blackwell Science, Oxford. 396 pp. [A treatment of general biodiversity issues]

Hodkinson, T. R., and J. A. N. Parnell (eds.). 2007. *Reconstructing the Tree of Life: Taxonomy and Systematics of Species Rich Taxa.* CRC Press, New York. 351 pp. [A collection of papers reviewing a range of approaches, mostly using example taxa]

Mittermeier, R. A., P. Robles Gil, M. Hoffmann, J. Pilgrim, T. Brooks, C. G. Mittermeier, J. Lamoreux, and G. A. B. da Fonseca. 2005. *Hotspots Revisited: Earth's Biologically Richest and Most Endangered Terrestrial Ecoregions.* Conservation International. 392 pp. [An easy-to-read single source on the importance of hot spots]

Myers, N. 1988. Threatened biotas: "Hot spots" in tropical forests. *The Environmentalist* 8:187–208. [The classic paper on hot spots]

APPENDIX
Selecting and Acquiring Software

Computer assisted phylogenetic analysis can consist of as many as four distinct activities. These are:

phylogenetic computation
data matrix preparation
cladogram analysis and printing
nucleotide sequence alignment

Success in performing these activities will depend on your ability to acquire and master suitable software. The following paragraphs describe some of the now myriad software packages that will perform these four functions. The broad-based appeal of phylogenetic approaches in traditionally nonsystematic fields has resulted in a tremendous proliferation of software packages with potential relevance to systematics, many of which are freely available to download. Links to sources of information on many of these are provided at the end of this list. Caveat emptor!

Current Parsimony-Based Phylogenetic Software

TNT This is the most powerful parsimony-based phylogenetics package available. It includes a range of options for finding trees and for evaluating character support. These include such choices as sectorial searching and true fusing, which are advantageous when dealing with very large datasets. It can be set to address all available RAM and can perform computations on matrices of virtually any size. TNT utilizes similar command and data file structures to NONA and Hennig86 (see below). The broad range of computational options include the ability to produce trees under the "implied weights" criterion of Goloboff. TNT is available for the Windows, Mac OS-X, and Linux platforms; the Windows version is available with a menu interface, whereas the other versions are command line driven. Available free of charge at www.cladistics.com; see also www.cladistics.org/tnt.html.

NONA This parsimony program is available in versions that will run on the Windows, Mac OS-X, and Linux platforms. Its speed and range of options will allow for the processing of all but the largest matrices. NONA utilizes similar command and data file structures to those originally used in Hennig86 (see below). NONA is most effectively used in concert with WINCLADA. Available free of charge at www.cladistics.com.

PAUP This program package combines phylogenetic computation and data matrix manipulation. It contains a vast selection of options, including the ability to do neighbor-joining and maximum likelihood computations. PAUP, as most users know it, was developed to run under the Macintosh operating system, although the currently available version, PAUP* 4.0 beta, will run on most platforms. PAUP uses the NEXUS data file format but can import data in the Hennig86/NONA file format. Information on availability and purchase at www.sinauer.com.

POY As described in the text, this software package treats DNA-sequence alignment and the computation of most parsimonious trees as a unified process. The use of POY is now possible on a single machine (with one or more processors) or on multiple machines running in parallel through the use of the most recent versions of the program package. Versions are available for use on the Windows, Mac OS-X, and Linux platforms. Available at www.research.amnh.org/scicomp/projects/poy.php.

Legacy Parsimony Program Options

PEE-WEE This program uses the same computational engine as NONA and offers most of the same features. Rather than computing most parsimonious trees, PEE-WEE produces "fittest trees" under Goloboff's system of implied weights, as described in Chapter 6. Implied weights computations can now be performed using the TNT package.

HENNIG86 This is an MS-DOS package known for its speed and efficiency. The program is limited to addressing 512k bytes of memory and cannot process more than 128 taxa and 900 characters. It also does not have the capability of interpreting nucleotide data coded as nucleotides. For these reasons Hennig86 will be found most effective when dealing with smaller morphology-based data matrices.

Data Matrix Preparation and Cladogram Analysis and Printing

WINCLADA This program combines data matrix preparation and tree evaluation and printing in a single package; it also allows the user to run the phylogenetics computing software packages NONA, PEE-WEE, and Hennig86 as subprocesses. WINCLADA provides a versatile data entry/editor that gives the

user substantial control over the form in which the data are submitted for calculation of cladograms. It will run in most Windows environments. Trees can be viewed and printed in various forms, topologies manipulated, and characters can be displayed in a variety of formats and optimized under various models. WINCLADA natively reads data in the Hennig86/NONA format, but it can also read NEXUS files. Available as shareware at www.cladistics.com.

MACCLADE This program performs data matrix preparation, tree manipulation, and printing in a manner similar to that found in WINCLADA, but in the Macintosh environment. Consequently, it is often used in concert with PAUP, although it can be used to import trees and data files generated by NONA and Hennig86. Available for purchase at www.sinauer.com.

Nucleotide Sequence Alignment

MALIGN This program performs parsimony-based multiple alignments of DNA sequences and can be downloaded at http://research.amnh.org/scicomp/projects/malign.php. It has been superseded philosophically in the view of its authors by POY (see above).

MUSCLE Multiple Sequence Comparison by Log-Expectation is reported to be both faster and more "accurate" than older programs such as CLUSTAL. Available at www.drive5.com/muscle/.

CLUSTAL A popular phenetic sequence alignment program with command-line interfaces (ClustalW; ftp://ftp.bio.indiana.edu/molbio/align/clustal/) or graphical interfaces (ClustalX; http://bips.u-strasbg.fr/fr/Documentation/ClustalX/).

BLAST Basic pairwise comparison of a sequence to those archived in GenBank can be conducted by this simple web-based query mechanism. Available at http://blast.ncbi.nlm.nih.gov/Blast.cgi.

Other Software Access Options

CIPRES This NSF-supported project offers a web portal to a portfolio of computational packages as well as the ability to access some packages for use on San Diego–based supercomputing facilities. A range of software options and download sites can be found at www.phylo.org/links/.

Felsenstein's Software Listing A syncretistic list of hundreds of phylogenetic software descriptions and links is available at http://evolution.genetics.washington.edu/phylip/software.html.

MESQUITE A modular system of programs "to help biologists analyze comparative data about organisms." Applications written by a variety of participants

range from character state optimization to various population genetic models. Available at http://mesquiteproject.org/mesquite/mesquite.html.

R A multiauthored modular system of software for "statistical computing and graphics" with a Pandora's box of phylogenetic applications. Modules can be downloaded for free from http://cran.cnr.berkeley.edu/.

GLOSSARY

"When *I* use a word," Humpty Dumpty said in rather a scornful tone,
"it means just what I choose it to mean—neither more nor less."
(CARROLL, 1960:188)

As with many aspects of systematics, the definitions of terms are sometimes controversial, and the definitions we provide here may not agree completely with those of others. Our aims in the text and in this glossary are to use these words consistently and to make our meanings clear.

ACCTRAN accelerated transformation; movement of character-state transformations as close as possible to the base of a tree, implying reversals of derived states

additive binary coding a method of recoding multistate characters that allows for representation of branching patterns through the use of multiple two-state variables (*see* nonredundant linear coding)

additive character (Farris transformation) a multistate character in which differential costs for state-to-state coding are specified and changes hypothesized during cladistic analysis must conform to the original coding for the character if additional steps are not to be added (*see* nonadditive character)

ad hoc hypothesis an assumption invoked to dispose of observations that do not conform to some preferred theory; in cladistics, used in reference to a priori invocations of homoplasy to explain similarity as nonhomologous

adjacency the relative position of character states, one to another, for a multistate character, without the implication of directionality of transformation (*see* polarity)

advanced used in reference to character data for describing a relative condition, namely as opposed to primitive; the derived condition of a feature; apomorphic

algorithm (for phylogenetic analysis) a decision-making process for computing cladograms, as in the "Wagner algorithm"

alignment the process of arranging sequence data from different organisms so that the homologous nucleotide positions correspond to one another across taxa

allopatric speciation the origin of a new species lineage by geographical subdivision of the parental species and the resultant interruption of gene flow

allozyme proteins used to examine variation within and among species; differences among alleles are due to different net charges of the proteins, as visualized by their different rates or directions of migration in gel electrophoresis

anagenesis change within a single lineage over evolutionary time; as opposed to cladogenesis, the spitting of lineages

ancestor *see* hypothetical ancestor

ancestral *see* primitive

ancestral polymorphism a potential source of incongruence due to genetic diversity that survives cladogenesis and persists in related lineages

apomorphic advanced, as opposed to primitive, as an apomorphic character; a feature unique to a group and therefore group defining

apomorphy an advanced character state; a group-defining feature

area cladogram in studies of historical biogeography, a cladogram in which the areas where taxa occur are substituted for the taxa themselves

area of endemism the congruent distributional limits of two or more species (Platnick)

asymmetrical (classification) a hierarchic scheme of relationships in which branching always occurs in just one of the lineages arising from each successive node (level in the hierarchy). A completely asymmetrical cladogram is *pectinate*

autapomorphy a derived feature (character state) unique to a taxon (*see* apomorphy)

availability criteria specified in the codes of nomenclature that a name must meet in order to enter into formal use, such as having been published in an acceptable manner, having been accompanied by a description of the biological material on which it was based, and others

bar code a term applied in systematics to refer to the use of machine-readable unique specimen identifiers (labels) (*see also* DNA bar code)

bilateral symmetry repetition of similar ("mirror image") parts on opposite sides of the sagittal body axis

binary character *see* two-state character

binomen the two-part name of a species (*see* binominal nomenclature)

binominal nomenclature the system of naming codified by Carolus Linnaeus, in which each species is recognized by a name composed of two words, the generic part (epithet) and the specific part (epithet), as *Homo sapiens*

biodiversity a term with varied meanings; often used with reference to taxon richness, as numbers of species or higher taxa in a given area

biogeography the study of geographic relationships among organisms; in the present work with strict reference to historical patterns

bootstrap(ping) a technique that uses pseudoreplicated subsamples of characters (sampled with replacement) in an attempt to understand to what degree a data set can stably reproduce a given tree topology

branch-and-bound algorithm a phylogenetic algorithm that determines an exact result (guaranteed most parsimonious tree) by examining only a portion of the universe of all possible trees, having discarded those portions of that universe longer than any of the trees in the portion examined in detail

branch support a measure of evidentiary support for branches on a cladogram, determined by assessing the length difference between shortest trees that do and do not contain the clade of interest

branch swapping a technique used in numerical phylogenetic computations that improves the chances of finding most parsimonious trees; "branches" from potentially

useful trees are moved to different locations in an attempt to find shorter trees, the length of the tree being recomputed with each move

branching character a multistate character in which adjacency relationships in a given direction are multiple (*see* linear character)

Bremer support *see* branch support

center of origin in biogeography, the area in which a group presumably originated and from which it later spread

character a feature that can be compared among taxa

character coding the formal process of converting raw observations of features of exemplars into characters and character states with specified transformation patterns in a data matrix

character state one of the various conditions of a feature (character) observed across a group of taxa

character-state identity the hypothesis that two or more taxa share the same character state, which is tested by congruence

character-state transformation the hypothetical link between adjacent states of a given character; the number (or total cost) of character-state transformations is the quantity that is minimized in cladistic analysis

character-state tree the graphic representation of the coding of an ordered multistate character; the topological relationships of the states of a character as coded

chorological progression within a group of taxa, the progressive advancement of character states with increase in distance from the geographic center of origin

circumscription the boundaries of a taxon, as determined by systematic study (changes of circumscription are one of the chief sources of nomenclatural synonymy)

clade concordance index a measure of intercladogram character conflict for all characters among a set of cladograms

cladist one who practices systematics using the methods of cladistics (i.e., grouping by synapomorphy through the application of the parsimony criterion)

cladistics grouping by synapomorphy through the application of the parsimony criterion

cladogenesis the spitting of lineages over time, with the consequent increase in numbers of taxa (*see* anagenesis)

cladogram a depiction of hierarchic relationships among taxa in the form of a treelike diagram, which shows relative recency of relationship and on which character-state transformations may be mapped, but without the connotation of amount of difference or time since divergence (*see* dendrogram, phenogram, phylogram)

classification (biological) subordinated list of names of taxa, usually with assigned ranks as used in the Linnaean hierarchy; often representing a formalization of the results of phylogenetic analysis

clique the set of perfectly congruent characters forming the optimal result in a compatibility analysis

clustering-level distance an ultrametric, or Euclidean, distance of the type employed in phenetics; such a distance implies a uniform rate of divergence by taxa that cluster at the same level (*see* path-length distance)

codivergence *see* cospeciation

coevolution the proposition that taxa have evolved in concert, as for example hosts and their parasites, with the expectation of congruent branching patterns in respective clades

combined analysis *see* simultaneous analysis

compatibility non-contradiction; two characters are compatible if they do not imply conflicting hypotheses of grouping

compatibility analysis a technique for inferring relationships among taxa, whereby no character contributing to the result of the analysis may be incongruent with the result; the largest set of compatible characters is called a "clique"

component a clade; a node and the branches descending from it in a cladogram (*see* hypothetical ancestor; term)

composite coding the approach of coding character data in a multistate format where possible, as opposed to presence–absence (reductionist) coding

compromise tree a tree derived from techniques that allow trees to be combined, but the results do not summarize exactly groupings from all of the input trees

concordance congruence

congruence the property of two or more characters or trees describing the same hierarchic scheme

conjunction multiple occurrences of a structure hypothesized to be the same in the same organism (conjunction indicates that the initial hypothesis of homology needs to be reassessed)

consensus the collection of groups (components) that is contained exactly in all (most parsimonious) trees resulting from a phylogenetic analysis (*see* compromise tree; consensus tree)

consensus tree the tree depicting the pattern of relationships shared in common among all fundamental trees and collapsing into polytomies all nodes at which any fundamental trees are incongruent

consilience agreement, usually among results from different analyses; referred to by Hennig as "reciprocal illumination"

consistency in cladistics, the degree to which variation in a character unambiguously supports a particular hierarchic scheme (*see* consistency index); in statistics, the property of gaining increased support for a "correct" inference with accumulation of evidence

consistency index (ci) a measure of consistency, maximal inconsistency having a value approaching 0.00, perfect consistency having a value of 1.00, those values being computed as the ratio of minimum possible number of changes in a character on a tree divided by the observed number of changes in the character

convergence independent gain of similar features in two or more lineages, often explained as a result of similar selection pressures (*see* homoplasy)

corroboration in the hypothetico-deductive approach, the discovery of evidence that supports the prediction of a hypothesis (*see* falsification)

cospeciation a pattern of parallel phylogenetic branching shared between symbiotic lineages

cost the value assigned to a state-to-state change during cladistic analysis; when these values are not equal the most parsimonious tree is the one with the smallest overall cost (*see* length)

crown group a clade composed of extant taxa (*see* stem group)

data matrix evidence on characters for a set of taxa in tabular form, with the rows representing the taxa and the columns representing the characters

data partition a subset of all available data that the investigator identifies as worthy of investigation (such as molecules vs. morphology)

decay index *see* branch support

deduction the approach to science in which deductions (predictions) implied by theories are tested by observation (in the deductivist approach, hypotheses can be falsified or corroborated, but not confirmed) (*see* induction)

definition an enumeration of the apomorphies for a taxon (*see* diagnosis)

DELTRAN delayed transformation; movement of character-state transformations as far as possible toward the terminals in a tree, with the implication of independent gains of derived states

dendrogram a general term for a branching diagram intended to represent hierarchic relationships among entities (e.g., taxa, individuals, alleles, areas)

derived *see* advanced

description in systematics, a detailed written statement of the attributes possessed by a given taxon

diagnosis in systematics, a summary statement of attributes that allows recognition of a taxon and separation of that taxon from other taxa

dichotomy two branches arising from a node on a cladogram (*see* polytomy; trichotomy)

direct optimization the combination of sequence alignment and phylogenetic inference into a single operation, potentially resulting in shorter trees than may be discovered by the two-step alternative (*see* alignment)

discordance *see* hierarchical discordance

dispersal in biogeography, the method by which individual taxa increase the size of their ranges, implying patterns that may or may not be shared in common with other taxa

distance a measure of similarity (or divergence) among taxa (*see* path-length distance; clustering-level distance)

DNA bar code a short region of DNA intended to serve as a universal indicator of species identity (for animals, a 600-nucleotide region of the mitochondrial Cytochrome Oxidase Subunit 1 gene)

endemism in biogeography, the idea of a taxon (taxa) being restricted to a place

ensemble consistency index (CI) the consistency index for the suite of all characters used in computing a cladogram

epistemology the branch of philosophy concerned with the nature of knowledge, asking questions such as, "how do we know what we know?" (*see* ontology)

essentialism in systematics, a claim about the existence of fundamental qualities that unite diverse individuals into natural kinds (Sober); the school of thought that assigns innate attributes or essences to taxa without regard to the inherent variability of biological systems (after Mayr)

Euclidean distance a straight line between two points in N-dimensional space (*see* clustering-level distance)

event-based methods model-based approaches to inferring patterns of biogeographical or coevolutionary congruence

evolutionary taxonomy the school of systematic (taxonomic) practice that believes that taxa should be recognized on the basis of combinations of apomorphies and plesiomorphies, depending on which are deemed more important in a given case

exact solution (to a phylogenetic problem) the set of most-parsimonious trees discovered by algorithms that examine all possible trees for a given data set or that produce equivalent results using branch-and-bound algorithms

exemplar taxon a species, or other lower-level taxon, chosen to represent a higher-level taxon in a phylogenetic study

extrinsic data data derived from sources not subject to genetic inheritance; for example, geographical range, or the host plant associations of phytophagous insects (*see* intrinsic data)

falsification in the hypothetico-deductive approach, the discovery of evidence that refutes a hypothesis; in systematics, the most parsimonious tree for a given data set is the tree with the smallest number of falsifiers (instances of homoplasy) (*see* corroboration)

Farris transformation *see* additive character

fit consistency; the degree to which characters conform to (define) a cladogram they have been used to compute; often measured with the consistency index

Fitch transformation *see* nonadditive character

fittest tree the tree(s) computed according to the "implied weights" of the characters, so as to maximize total fit (*see* implied weighting)

gap in DNA sequence alignment, space inserted to achieve correspondence of putatively homologous nucleotide positions across a group of taxa that possess unequal numbers of nucleotides

gap coding a method for converting continuously distributed variables into discrete character states by arbitrarily breaking them at perceived "gaps" in the distribution

genealogy phylogeny; relationships of ancestry and descent

general area cladogram a cladogram showing the resolution of area relationships among a variety of taxon-area cladograms (*see* area cladogram)

gene tree a scheme of relationships determined by data comprising exclusively amino-acid or DNA sequence data from a single gene (*see* species tree)

gradist one who espouses the legitimacy of paraphyletic groups in classification (*see* evolutionary taxonomy)

ground plan the set of attributes (characters) possessed by the hypothetical common ancestor of a group of taxa; may be deduced, as in a composite taxon used as an outgroup, or optimized, as for an HTU (node) on a cladogram computed from actual character data

heterobathmy (of synapomorphy) the phenomenon whereby different characters define groups at different levels in the taxonomic hierarchy

heuristic (phylogenetic solution) the set of most parsimonious trees inferred through the use of algorithms applied to data sets so large that all possible trees cannot be examined (*see* exact solution)

hierarchical discordance disagreement; as, for example, the degree to which an additive multistate character does not agree with a cladogram it helps define

holomorph the totality of all characters pertaining to a taxon (Hennig)

holophyletic monophyletic; a term coined by evolutionary taxonomists to allow for the use of "monophyletic" to refer to paraphyletic groups

holophyly the property of being holophyletic

holotype the unique specimen designated to represent the concept for a named species; the name bearer

homology the recognition across taxa of identity among structures, behaviors, etc. on the basis of similarity and position

homonomy in homology determination, the occurrence of multiple similar structures in a single organism, such as leaves on a plant

homonymy in nomenclature, the same name applied to two or more groups (e.g., species, genus, family) in botany or zoology, but not between the two fields

homoplasy incongruence; convergence; parallelism as implied by reversal or two or more independent gains of a character state on a cladogram; the presumed multiple origin, reduction, or re-evolution of structures or behaviors

horizontal gene transfer a potential source of incongruence due to the incorporation of foreign genetic material into the genome, often effected by viruses

hot spot in biodiversity studies, a restricted biogeographical region containing a large number of endemic species

HTU *see* hypothetical taxonomic unit

hypothetical ancestor the node in a cladogram representing the inferred set of attributes for two or more terminal taxa

hypothetical taxonomic unit (HTU) internal node on a cladogram (*see* hypothetical ancestor; node)

identification the process of assigning specimens to names

implied weighting an optimality criterion whereby weights (values) of characters are determined by the degree to which the characters "fit" the tree, the optimal tree being the one with the greatest sum for the weights of all characters (Goloboff) (*see* fittest tree)

inapplicable data data that can never be known (or coded) for a given taxon because the relevant feature is not present or so modified that it is unrecognizable

incertae sedis literally, "of uncertain position"; applied to taxa that, for some reason, cannot be placed with certainty in a classification, as for example, incomplete fossils

incongruence lack of agreement, as usually applied to the fit of characters to a cladogram (*see* congruence) or the disagreement between topologies of separate cladograms

incongruence length difference (ILD) a measure of the degree of congruence between data partitions, measured as the length of the shortest tree from the combined data minus the sum of the tree lengths for the partitions analyzed separately

inconsistency the undesirable statistical property in which increasing the amount of data provides increasing levels of support for an incorrect conclusion

indel "insertion/deletion"; hypothesized events leading to changes in length of homologous DNA or RNA sequences

independence the quality of data that makes them appropriate for conjoint analysis, whereby in the case of characters, variation in one character is not tied to variation in other characters; the ability of different characters in phylogenetic analysis to serve as unique sources of evidence

induction the approach to science through which knowledge accrues over the course of continued observation and supporting evidence is considered to confirm hypotheses; the Baconian method (*see* deduction)

internal rooting a method of ordered character state transformation in which the presumed outgroup state is in the middle of the transformation series

intrinsic data data subject to genetic inheritance; for example, morphological features or DNA sequences (*see* extrinsic data)

introgression a potential source of incongruence due to differential gene flow across taxonomic boundaries that results in incorporation of foreign genes into the genome of a taxon

invalid name an available name that is superceded by a valid name

isomorphy identity; the term used to describe the exact portrayal of relationships in a ranked formal hierarchic classification as found in a cladogram

jackknife (jackknifing) a technique that uses pseudoreplicated subsamples of characters or taxa (sampled without replacement) in an attempt to understand to what degree a data set can stably reproduce a given tree topology

lectotype a specimen designated from among the members of a syntype series to serve the function of a holotype

length (of a tree) the number of steps (character state transformations) on a given cladogram; the quantity minimized in standard cladistic analysis (*see* cost)

lineage a terminal taxon or monophyletic group

linear character a multistate character in which adjacency relationships are sequential; an ordinal character (Pimintel and Riggins) (*see* branching character)

Linnaean hierarchy the hierarchic system of named ranks for taxa codified by Linnaeus and elaborated by later workers

long-branch attraction the theory that sequence data in rapidly evolving terminal taxa may contain large numbers of characters evolving in parallel, and which may therefore allow for the formation of groups even though the terminal taxa are not each others' closest relatives

Manhattan distance path-length distance

mapping (of characters) the practice of plotting "extrinsic" character data on a cladogram produced from a matrix of "intrinsic" data; more generally, determining the distribution of any character not used in a prior analysis

matrix *see* data matrix

maximum likelihood estimation determination of relationships among organisms through computation of probabilities of character distributions (evolution) on the basis of an a priori model of character evolution

meristic serially homologous structures that exhibit variability in their numbers, such as fin rays in fish or antennal segments in insects

metaphysics in systematics, the set of beliefs that provide the underpinnings for the growth of knowledge, which advocates of parsimony argue should be minimized; the claim that scientific explanations should be parsimonious is itself metaphysical

metric one of a variety of mathematical properties of measurement; in systematics, metrics satisfying the triangle inequality are used as the basis for computing distances in cladistics and phenetics (*see* clustering-level distance; path-length distance)

minimum spanning tree a branching diagram in which observed entities can occur at internal nodes; often used to represent unrooted networks of relationship among DNA haplotypes

missing taxon in biogeography, a taxon absent from one of the areas in one of the area cladograms being compared, the result being noncorrespondence of distributions across taxa

molecular data in the twenty-first century, DNA sequence data; molecules such as cuticular hydrocarbons are viewed as part of the phenotype

monophyletic a group defined by synapomorphies; a group containing a hypothetical common ancestor and all of its descendants; a group connected to the remainder of the Tree of Life by a single branch (*see* paraphyletic; polyphyletic)

morphocline analysis ordering of character states on the basis of relative similarity alone, without regard for congruence with other characters

mosaic evolution differential rates of evolution in different characters

most parsimonious tree (MPT) for a given data set, the tree(s) of minimum length as computed under the parsimony criterion

multistate character a feature for which there are three or more conditions (character states) in a set of three or more taxa

natural group a monophyletic group

neighbor joining a phenetic method that sequentially clusters most similar terminal taxa, frequently used for the analysis of DNA sequence data

neotype a specimen selected to serve the function of the holotype when the holotype, lectotype, or syntypes have been lost or destroyed

nesting the property of hierarchy, whereby smaller, less inclusive groups are subsets of (i.e., completely included in) larger, more inclusive groups

network an undirected hierarchic arrangement of taxa; an unrooted result of numerical cladistic computation

node (on a cladogram) that point of intersection in a hierarchy that identifies a component; a hypothetical taxonomic unit

nomenclature *see* binominal nomenclature

nonadditive character (Fitch transformation) a multistate character in which the same cost (length) is assigned to any state-to-state change during cladistic analysis (*see* additive character)

nonredundant linear coding a method of character coding that uses multiple variables to code complex multistate characters, but those variables need not all be two-state as in additive binary coding (*see* additive binary coding)

numerical taxonomy the name originally attached to phenetics; the theory and practice of grouping by overall similarity with the attendant assumption of uniform rates of change; sometimes, any taxonomic approach that applies quantitative techniques

objective character weighting weighting on the basis of the observed properties of characters, such as the consistency index (*see* subjective character weighting)

ontogeny the process of development; the stages of the life cycle of an organism

ontology the area of philosophy concerned with the substance of knowledge, reality, and truth; observations, results of hypothesis tests, resultant theories, and "facts" are ontological claims about the nature of the world (*see* epistemology)

operational taxonomic unit (OTU) a terminal taxon used in an analysis of relationships, especially as understood in the practice of phenetics

optimality criterion the decision-making rule used to select among alternative topologies in phylogenetic analysis; for example, the optimality criterion for computing most parsimonious trees is minimization of required character-state changes

optimization in phylogenetic inference, the process of discovering the best tree under a given optimality criterion by examining the fit of the characters to alternative topologies (Chapter 5); in biogeography and ecological studies, the method of assigning character states to hypothetical taxonomic units (internal cladogram nodes) (Chapter 9; *see* ACCTRAN, DELTRAN)

ordered character *see* additive character

ordinal character *see* linear character

orthology homology; in comparison with duplicated genes, orthologous copies diverge taxonomically, while paralogous copies diverge from the event of gene duplication (*see* paralogy)

outgroup the taxon (or taxa) used to determine the root of a cladogram (or other diagram of relationships among taxa; e.g., those produced by maximum likelihood analysis), and thus the polarities of the characters used to compute it

overall similarity the concept of relationship based on sameness and difference averaged across all characters; the method used for grouping by the phenetic approach, under which the shared absence of characters may be deemed informative

paralogy serially homologous duplication; originally used to describe duplicated gene regions that exist in the same genome; by analogy, in biogeography and coevolution, the same area occurring more than once in sequence on an area cladogram

paraphyletic a group containing a hypothetical common ancestor and some, but not all, of its descendants; a group connected to the Tree of Life by a single branch but with one or more subordinate branches removed from it (*see* monophyletic; polyphyletic)

parenthetical notation a method used by computer phylogenetics programs to describe the nesting of taxa in a cladogram

parsimony simplicity of explanation; minimizing ad hoc hypotheses; the approach applied in cladistics whereby similarities are assumed to be homologies, in the absence of evidence to the contrary; in cladistic analysis, parsimony selects the cladogram with the minimum cost (number of steps) as the preferred hypothesis of relationships

partitioned branch support a measure of the contribution of a data partition to the overall support for a given branch in a combined analysis

path-length distance distance along a path between two points measured in "steps" without assumptions about rates of divergence among taxa (*see* clustering-level distance)

pectinate (classification) a cladogram that branches asymmetrically, like the teeth in a comb, each successive clade having a single terminal as its sister taxon

pheneticist one who practices phenetics

phenetics the method(s) of classifying organisms whereby rank and relationship are determined on the basis of overall similarity (i.e., the sum of similarities and differences), and uniform rates of change are often assumed

phenogram a hierarchic diagrammatic representation of overall similarity derived from the application of phenetic techniques, which may or may not reflect phylogenetic relationships depending on constancy of evolutionary rates

phylogenetic hypothesis a statement about genealogical relationships among a group of taxa, usually based on empirical data that have been analyzed by some method to yield a branching diagram

phylogenetic nomenclature a system of names for monophyletic groups that has been proposed as a replacement for the Linnaean system and the Codes of Zoological and Botanical Nomenclature

phylogenetic systematics cladistics, often more particularly as outlined by Willi Hennig

phylogeny the process of evolutionary diversification; misused by many to refer to the inferred pattern of genealogical relationships among a set of taxa (*see* phylogenetic hypothesis)

phylogram a hierarchic diagrammatic representation of relationships that includes relative branching order and some indication of relative branch length

plesiomorphic primitive, as opposed to advanced; the quality of a character being group-defining only at a more inclusive level

plesiomorphy a primitive character, not group defining at the level at which it is being observed

polarity the direction of character-state change

polyphyletic a group of taxa not including their hypothetical common ancestor; an assemblage of taxa connected to the Tree of Life by more than a single branch (*see* monophyletic; paraphyletic)

polytomy three or more branches arising from a single node on a cladogram, reflecting lack of resolution (*see* dichotomy; trichotomy)

positivism the largely rejected twentieth-century school of philosophy which argued that all propositions could be reduced to sense statements (i.e., statements implying no metaphysical ideas) (*see* induction)

prediction deduction from a theory; the anticipated nature of a future observation; in cladistics, the ability to predict the distributions of previously unobserved (unstudied) characters among taxa

presence–absence coding an approach to character coding whereby all data are rendered in a two-state format

primitive relatively earlier; used in reference to the appearance of characters (or their states) on a cladogram; plesiomorphic

priority the rule of biological nomenclature stipulating that the name first applied to a taxon is the one that will be treated as valid

progression rule Hennig's now largely discredited biogeographical theory that taxa in the oldest part of their range are the most plesiomorphic, and taxa in more recently colonized areas are progressively more derived

radial symmetry repetition of similar structures around the central body axis of an organism, such as ray flowers in Asteraceae or tentacles of a sea anemone

ranking the assignment of hierarchic position

reciprocal illumination consilience

reductionist coding the practice of coding all character data in a presence–absence format (*see* composite coding)

redundant (paralogous) distributions the sequential or multiple occurrence of the same area on an area cladogram; a phenomenon observed to occur frequently among the basal taxa (areas) on cladograms

retention index (ri) the fraction of potential synapomorphy retained as synapomorphy on a cladogram

robustness a general term for well-resolved branches in a phylogenetic tree; in cladistics, stable or strongly supported branches; in model-based approaches, descriptive of models that produce the "correct" tree even when the data do not fit the model (*see* stability; support)

root the point at which a cladogram is hypothetically connected to the remainder of the Tree of Life and is thereby given direction; the node used to determine the polarity of the characters used to compute a cladogram

rooting determining the root; the position of the root

scattering the behavior of character-state distributions observed when a two-state character does not fit a cladogram perfectly

scenario a story describing the evolution of organisms, structures, etc.; usually not based on critical analysis of evidence

sectorial search a fast heuristic search method that analyzes subclades of a large data set separately and, upon discovery of shorter solutions for that group, reconnects them to the entire tree

sensitivity the capacity to recover the same hypothesis of relationships under alternate weighting schemes

sequencing (in classifications) the treatment of successive sister-group relationships as being of equal rank; a method for minimizing the number of ranks required to convert a pectinate cladogram into a formal classification (*see* subordination)

sequencing (of nucleotides) the determination of nucleotide composition and order in a portion of the genome

serial homology the repetition of parts in the body plan of an organism, for example, the repetition of similar segments in the postcephalic region of a centipede

simultaneous analysis the inclusion of all available data in a global parsimony analysis

sister group(s) a pair of taxa united by one or more unique characters, inferred to be more closely related to one another than to any other taxon

special similarity *see* synapomorphy

species in cladistics, often used in reference to the minimal-level taxon subject to analysis

species tree a frequently ambiguous term, often used in reference to a cladogram or other hierarchic diagram based on a preponderance of the evidence; used by some authors to refer to the "true" relationships for a group (*see* gene tree)

stability in phylogenetic inference, the degree to which the same topology is produced by analysis of pseudoreplicated subsamples of the original data matrix; in nomenclature, the preservation of the relationship between a name and the taxon to which it refers

state *see* character state

stem group an assemblage of extinct taxa that is paraphyletic with respect to a crown group of extant taxa, for example dinosaurs excluding birds

step(s) on a cladogram, the number of state changes for a character or characters; the measure of length used when computing a path-length (Manhattan) distance

subjective character weighting determining the value of characters for phylogenetic analysis on the basis of criteria not related to the behavior of the characters themselves, as for example, apparent morphological complexity or supposed adaptive significance

subordination (in classifications) the treatment of successive sister-group relationships as being of progressively lower rank (i.e., the nesting of ranks corresponding to the nesting of the hierarchy itself); the method requires the maximum number of ranks to convert a pectinate cladogram into a formal classification (*see* sequencing [in classifications])

subtree analysis an approach in historical biogeography for analyzing congruence among area cladograms, whereby paralogous areas are removed before comparisons are made among the area cladograms

successive approximations weighting a method of evaluating the strength of characters as they define a given cladogram; a most parsimonious tree(s) is first computed, then characters are weighted, often according to their consistency index on that tree(s), and the tree recomputed; the weighting and recomputation process is repeated until a stable result is achieved (*see* implied weighting)

surrogacy in some studies of biodiversity, the use of one or a few taxa as a way of assessing the characteristics of a biota without the necessity of studying all of its constituent members; selective sampling

symmetrical (classification) a branching pattern in which subdivision occurs equally in all lineages at successive nodes, resulting in a pattern resembling, for example, sports playoff brackets (*see* asymmetrical classification)

symplesiomorphy shared, primitive traits that define monophyletic groups only at higher levels

synapomorphy shared, derived character; group-defining trait; the property of being group-defining

syncretist an evolutionary taxonomist; one who combines parts of different, often philosophically incompatible methods (e.g., phenetics and cladistics)

synonym two or more different names applied to the same taxon

syntype two or more specimens examined by the original author of a species, none of which was uniquely designated to serve as the name bearer for the taxon

systematics the practice of recognizing taxa, determining hierarchic relationships among those taxa, and formally specifying those relationships; frequently used in a sense roughly equivalent to taxonomy

taxon (taxa) a group of organisms at any level in the systematic hierarchy; in systematics, the least inclusive taxon is the species

taxon-area cladogram *see* area cladogram

taxonomic congruence the comparison of hypotheses of relationship from separate analyses of data partitions to assess the proportion of nodes in common; the property of different data partitions producing results that are compatible (not in conflict) with one another

taxonomy the practice of recognizing and classifying organisms; frequently used in a sense equivalent to *systematics*

term a terminal taxon; in biogeography, a terminal area in an area cladogram (*see* component)

terminal taxon a taxon for which data are actually observed in a cladistic analysis; a group of organisms that for the purposes of a given study is assumed to be homogeneous with respect to other such groups

test comparison of observation with theory, as comparing the actual distribution of characters with a scheme of phylogenetic relationships (*see* deduction)

three-taxon statements a method for recoding characters as composite homology statements that reweights their evidentiary value

tokogenetic relationships the reticulate pattern of connections existing below the species level as a result of interbreeding or other factors

topology (of a cladogram) the geometric form of a cladogram; the pattern of branching and nested hierarchic relationships

total evidence *see* simultaneous analysis

transformation series a specified ordering of relations between the states of a character

transition in a DNA sequence, the substitution of a purine for another purine (A↔G) or a pyrimidine for another pyrimidine nucleotide (C↔T) (*see* transversion)

transversion in a DNA sequence, the substitution of a purine for a pyrimidine or vice versa (*see* transition)

tree generally, any branching diagram that specifies hierarchic relationships among taxa; sometimes, a branching diagram implying a specific pattern of ancestor-descendant relationships or of speciation (after Nelson)

tree drifting a heuristic search method that retains suboptimal trees as starting points for additional heuristic searches, thereby increasing the opportunity to discover more parsimonious solutions

tree fusing a fast heuristic search method for large data sets that swaps resolved subclades among most parsimonious trees resulting from a basic search to seek more parsimonious solutions

tree space the tree topologies that an algorithm examines during the course of searching for a most parsimonious solution to a phylogenetic problem

triangle inequality the property of triangles stipulating that the sum of the lengths of two sides cannot be less than the length of the third side

trichotomy three branches arising from a single node on a cladogram (*see* dichotomy; polytomy)

two-state character a character for which there are two conditions, for example, present and absent

type specimen *see* holotype

ultrametric *see* clustering-level distance

unordered character *see* nonadditive character

valid name the available name correctly applied to a taxon

variable a character; the representation of a character (and its states) in a data matrix

vicariance in biogeography, the subdivision of ancestral ranges of taxa

Wagner algorithm a method of computing phylogenetic relationships using the parsimony criterion; the underlying basis of all phylogenetic algorithms

weighting (of characters) assigning greater importance to some characters (*see* objective character weighting; subjective character weighting)

widespread taxon a taxon that occurs in more than one area of endemism, as areas of endemism are interpreted on the basis of the distributions of other taxa

LITERATURE CITED

Aanen, D. K., P. Eggleton, C. Rouland-Lefèvre, T. Guldberg-Frøslev, S. Rosendahl, and J. J. Boomsma. 2002. The evolution of fungus-growing termites and their mutualistic fungal symbionts. *Proceedings of the National Academy of Sciences USA* 99:14887–14892.

Acocks, J. P. H. 1953. *Veld Types of South Africa.* Botanical Survey Memoir, no. 28. Department of Agriculture, Pretoria.

Adams, E. N., III. 1972. Consensus techniques and the comparison of taxonomic trees. *Systematic Zoology* 21:390–397.

Agnarsson, I., and J. A. Miller. 2008. Is ACCTRAN better than DELTRAN? *Cladistics* 24:1032–1038.

Alfaro, M. E., and J. P. Huelsenbeck. 2006. Comparative performance of Bayesian and AIC-based measures of phylogenetic model uncertainty. *Systematic Biology* 55:89–96.

Altshul, S. F., W. Gish, W. Miller, E. W. Myers, and D. J. Lipman. 1990. Basic local alignment search tool. *Journal of Molecular Biology* 215:403–410.

Amundson, R. 2005. *The Changing Role of the Embryo in Evolutionary Thought: Roots of Evo-Devo.* Cambridge University Press, New York. 280 pp.

Andersen, N. M. 1997. Phylogenetic tests of evolutionary scenarios: the evolution of flightlessness and wing polymorphism in insects, 91–108. *In:* Grandcolas, P. (ed.), *The Origin of Biodiversity in Insects: Phylogenetic Tests of Evolutionary Scenarios.* Memoires du Museum National D'histoire Naturelle, Paris, vol. 173.

Anderson, F. E., and D. L. Swofford. 2004. Should we be worried about long-branch attraction in real data sets? Investigations using metazoan 185 rDNA. *Molecular Phylogenetics and Evolution* 33:440–451.

Angiosperm Phylogeny Group. 2003. An update of the Angiosperm Phylogeny Group classification for the orders and families of flowering plants: APG II. *Botanical Journal of the Linnean Society* 141:399–436.

Appel, T. A. 1987. *The Cuvier-Geoffroy Debate: French Biology in the Decades before Darwin.* Oxford University Press, Oxford. 305 pp.

Archie, J. W. 1985. Methods for coding variable morphological features in numerical taxonomic analysis. *Systematic Zoology* 34:326–345.

Archie, J. W. 1989a. A randomization test for phylogenetic information is systematic data. *Systematic Zoology* 38:239–252.

Archie, J. W. 1989b. Homoplasy excess ratios: new indices for measuring levels of homoplasy in phylogenetic systematics and a critique of the consistency index. *Systematic Zoology* 38:253–269.

Ashlock, P. D. 1971. Monophyly and associated terms. *Systematic Zoology* 20:63–69.

Ashlock, P. D. 1974. The uses of cladistics. *Annual Review of Ecology and Systematics* 5:81–99.

Ashlock, P. D. 1979. An evolutionary systematist's view of classification. *Systematic Zoology* 28:441–450.

Australia's Virtual Herbarium. 2005. http://www.chah.gov.au/avh/index.html © Council of Heads of Australian Herbaria [accessed 5 Jan. 2009].

Avise, J. C. 2006. *Evolutionary Pathways in Nature: A Phylogenetic Approach.* Cambridge University Press, New York. 286 pp.

Ax, P. 1985. Stem species and the stem lineage concept. *Cladistics* 1:279–287.

Axelius, B. 1991. Areas of distribution and areas of endemism. *Cladistics* 7:197–199.

Baker, R. H., and R. DeSalle. 1997. Multiple sources of character information and the phylogeny of Hawaiian *Drosophila. Systematic Biology* 46:654–673.

Barbadilla, A., L. M. King, and R. C. Lewontin. 1996. What does electrophoretic variation tell us about protein variation? *Molecular Biology and Evolution* 13:427–432.

Barkley, T. M., P. DePriest, V. Funk, R. W. Kiger, W. J. Kress, and G. Moore. 2004. Linnaean nomenclature in the twenty-first century: a report from a workshop on integrating traditional nomenclature and phylogenetic classification. *Taxon* 53:153–158.

Barrett, M., M. J. Donoghue, and E. Sober. 1991. Against consensus. *Systematic Zoology* 40:486–493.

Barry, M. 1837. On the unity of structure in the animal kingdom. *Edinburgh New Philosophical Journal* 22:117–141.

Baum, B. 1992. Combining trees as a way of combining data sets for phylogenetic inference, and the desirability of combining gene trees. *Taxon* 41:3–10.

Beatty, J. 1982. Classes and cladists. *Systematic Zoology* 31:25–34.

Belon, P. 1555. *L'histoire de la Nature des Oyseaux.* Guillaume Cavellat, Paris.

Beltrán, M., C. D. Jiggins, A.V. Z. Brower, E. Bermingham, and J. Mallet. 2007. Do pollen feeding, pupal-mating and larval gregariousness have a single origin in *Heliconius* butterflies? Inferences from multilocus DNA sequence data. *Biological Journal of the Linnean Society* 92:221–239.

Bergsten, J. 2005. A review of long-branch attraction. *Cladistics* 21:163–193.

Bertrand, Y., F. Pleijel, and G. W. Rouse. 2006. Taxonomic surrogacy in biodiversity assessments, and the meaning of Linnaean ranks. *Systematics and Biodiversity* 4:149–159.

Bininda-Emonds, O., J. Gittleman, and A. Purvis. 1999. Building large trees by combining phylogenetic information: a complete phylogeny of the extant Carnivora. *Biological Reviews* 74:143–175.

Biodiversity Heritage Library. http://www.biodiversitylibrary.org/ [accessed 9 Jan 2009].

Biodiversity Hotspots. http://www.biodiversityhotspots.org/ ©2007 Conservation International [accessed 5 Jan. 2009].

Blackwelder, R. E. 1967. *Taxonomy: A Text and Reference Book.* John Wiley and Sons, New York. 698 pp.

Bock, W. 1974. Philosophical foundations of classical evolutionary classification. *Systematic Zoology* 22:375–392.

Bogdanowicz, S. M., W. E. Wallner, T. M. Bell, and R. G. Harrison. 1993. Asian gypsy moths (Lepidoptera: Lymantriidae) in North America: evidence from molecular data. *Annals of the Entomological Society of America* 86:710–715.

Boudreaux, H. B. 1979. *Arthropod Phylogeny with Special Reference to Insects.* New York: John Wiley & Sons. 320 pp.

Boyden, A. 1947. Homology and analogy: a critical review of the meaning and implication of these concepts in biology. *American Midland Naturalist* 37:648–669.

Boyer, S. L., R. M. Clouse, L. R. Benavides, P. Sharma, P. I. Schwendinger, I. Karunarathna, and G. Giribet. 2007. Biogeography of the world: a case study from cyphophthalmid Opiliones, a globally distributed group of arachnids. *Journal of Biogeography* 34:2070–2085.

Brady, R. H. 1983. Parsimony, hierarchy, and biological implications, 49–60. *In:* Platnick, N. I., and V. A. Funk (eds.), *Advances in Cladistics.* Vol. 2, *Proceedings of the Second Meeting of the Willi Hennig Society.* Columbia University Press, New York.

Brady, R. H. 1985. On the independence of systematics. *Cladistics* 1:113–126.

Brady, R. H. 1994. Explanation, description, and the meaning of transformation, 11–29. *In:* Scotland, R., D. Seibert, and D. M. Williams (eds.), *Models in Phylogeny Reconstruction.* Clarendon Press, Oxford.

Bremer, K. 1988. The limits of amino acid sequence data in angiosperm phylogenetic reconstruction. *Evolution* 42:795–803.

Bremer, K. 1990. Combinable component consensus. *Cladistics* 6:369–372.

Bremer, K. 1994. Branch support and tree stability. *Cladistics* 10:295–304.

Bremer, K., and H.-E. Wanntorp. 1978. Phylogenetic systematics in botany. *Taxon* 27: 317–329.

Brooks, D. R. 1981. Hennig's parasitological method: a proposed solution. *Systematic Zoology* 30:229–249.

Brower, A.V. Z. 1994. Phylogeny of *Heliconius* butterflies inferred from mitochondrial DNA sequences (Lepidoptera: Nymphalidae). *Molecular Phylogenetics and Evolution* 3:159–174.

Brower, A.V. Z. 1996. Parallel race formation and the evolution of mimicry in *Heliconius* butterflies: a phylogenetic hypothesis from mitochondrial DNA sequences. *Evolution* 50:195–221.

Brower, A.V. Z. 1997. The evolution of ecologically important characters in *Heliconius* butterflies (Lepidoptera: Nymphalidae): a cladistic review. *Zoological Journal of the Linnean Society* 119:457–472.

Brower, A.V. Z. 1999. Delimitation of phylogenetic species with DNA sequences: a critique of Davis and Nixon's Population Aggregation Analysis. *Systematic Biology* 48:199–213.

Brower, A.V. Z. 2000a. Homology and the inference of systematic relationships: Some historical and philosophical perspectives. 10–21. *In:* Scotland, R. W., and R. T. Pennington (eds.), *Homology and systematics: coding characters for phylogenetic analysis.* Taylor and Francis, London.

Brower, A.V. Z. 2000b. Evolution is not an assumption of cladistics. *Cladistics* 16: 143–154.

Brower, A.V. Z. 2002. Cladistics, phylogeny, evidence and explanation: a reply to Lee. *Zoologica Scripta* 31:221–223.

Brower, A.V. Z. 2006a. Problems with DNA barcodes for species delimitation: "ten species" of *Astraptes fulgerator* reassessed (Lepidoptera: Hesperiidae). *Systematics and Biodiversity* 4:127–132.

Brower, A.V. Z. 2006b. The how and why of branch support and partitioned branch support, with a new index to assess partition incongruence. *Cladistics* 22:378–386.

Brower, A.V. Z., and R. DeSalle. 1994. Practical and theoretical considerations for choice of a DNA sequence region in insect molecular systematics, with a short review of published studies using nuclear gene regions. *Annals of the Entomological Society of America* 87:702–716.

Brower, A.V. Z., R. DeSalle, and A. Vogler. 1996. Gene trees, species trees, and systematics: a cladistic perspective. *Annual Review of Ecology and Systematics* 27:423–450.

Brower, A.V. Z., and M. G. Egan. 1997. Cladistics of *Heliconius* butterflies and relatives (Nymphalidae: Heliconiiti): the phylogenetic position of *Eueides* based on sequences from mtDNA and a nuclear gene. *Proceedings of the Royal Society London B* 264:969–977.

Brower, A.V. Z., and V. Schawaroch. 1996. Three steps of homology assessment. *Cladistics* 12:265–272.

Brower, L. P., J. V. Z. Brower, and P. W. Westcott. 1960. Experimental studies of mimicry. 5. The reactions of toads (*Bufo terrestris*) to bumblebees (*Bombus americanorum*) and their robberfly mimics (*Mallophora bomboides*), with a discussion of aggressive mimicry. *American Naturalist* 94:343–356.

Brundin, L. Z. 1966. Transantarctic relationships and their significance, as evidenced by chironomid midges. *Kungl. Svenska Vetenskapsakademiens Handlingar*. Fjarde series, 11:1–472.

Brundin, L. Z. 1981. Croizat's panbiogeography versus phylogenetic biogeography, 94–138. *In:* Nelson, G., and D. E. Rosen (eds.), *Vicariance Biogeography: A Critique.* Columbia University Press, New York.

Bull, J. J., J. P. Huelsenbeck, C. W. Cunningham, D. L. Swofford, and P. J. Waddell. 1993. Partitioning and combining data in phylogenetic analysis. *Systematic Biology* 42:384–397.

Cain, A. J., and G. A. Harrison. 1960. Phyletic weighting. *Proceedings of the Zoological Society of London* 13:1–31.

Camin, J. H., and R. R. Sokal. 1965. A method for deducing branching sequences in phylogeny. *Evolution* 19:311–326.

Cantino, P. D., and K. de Queiroz. 2007. *International Code of Phylogenetic Nomenclature.* Version 4b. http://www.ohiou.edu/phylocode [accessed 5 Jan. 2009].

Carmean, D., and B. Crespi. 1995. Do long branches attract flies? *Nature* 373:666.

Carpenter, J. M. 1988. Choosing among multiple equally most parsimonious cladograms. *Cladistics* 4:291–296.

Carpenter, J. M. 1989. Testing scenarios: wasp social behavior. *Cladistics* 5:131–144.

Carpenter, J. M. 1990. On genetic distances and social wasps. *Systematic Zoology* 39: 391–397.

Carpenter, J. M. 1991. Phylogenetic relationships and the origin of social behavior in the Vespidae, 7–32. *In:* Ross, K. G., and R. W. Matthews (eds.), *Social Biology of Wasps.* Cornell University Press, Ithaca, New York.

Carpenter, J. M. 1992. Random cladistics. *Cladistics* 8:147–153.

Carpenter, J. M. 1996. Uninformative bootstrapping. *Cladistics* 12:177–181.

Carpenter, J. M. 2003. Critique of pure folly. *Botanical Review* 69:79–92.

Carpenter, J. M., P. A. Goloboff, and J. S. Farris. 1998. PTP is meaningless, T-PTP is contradictory: a reply to Trueman. *Cladistics* 14:105–116.

Carroll, L. 1960. *Alice's Adventures in Wonderland & Through the Looking-Glass.* Penguin Books, New York.

Cassis, G., and G. F. Gross. 1995. *Zoological Catalog of Australia. 27.3A. Hemiptera: Heteroptera (Coleorrhyncha to Cimicomorpha).* Australian Biological Resources Study, CSIRO, Melbourne.

China, W. E. 1933. A new family of Hemiptera: Heteroptera with notes on the phylogeny of the suborder. *Annals and Magazine of Natural History,* ser. 10, 12:180–196.

Chippindale, P. T., and J. J. Wiens. 1994. Weighting, partitioning, and combining characters in phylogenetic analysis. *Systematic Biology* 43:278–287.

Chor, B., M. D. Hendy, B. R. Holland, and D. Penny 2000. Multiple maxima of likelihood in phylogenetic trees: an analytic approach. *Molecular Biology and Evolution* 17:1529–1541.

Claridge, M. F., H. A. Dawah, and M. R. Wilson (eds.). 1997. *Species.* The Systematic Association Special Volume Series, no. 54. Chapman and Hall, London. 439 pp.

Coddington, J. A. 1988. Cladistic tests of adaptational hypotheses. *Cladistics* 4:3–22.

Cook, L., and M. Crisp. 2005. Directional asymmetry of long-distance dispersal and colonization could mislead reconstructions of biogeography. *Journal of Biogeography* 32:741–754.

Corrick, M. G., B. A. Fuhrer, and A. S. George. 1996. *Wildflowers of Southern Western Australia.* Five Mile Press, Noble Park, Victoria, Australia.

Coyne, J. A., and H. A. Orr. 2004. *Speciation.* Sinauer Associates, Sunderland, Massachusetts. 545 pp.

Cracraft, J. 1992. The species of the birds-of-paradise (Paradisaeidae): applying the phylogenetic species concept to a complex pattern of diversification. *Cladistics* 8:1–43.

Craw, R. C. 1982. Phylogenetics, areas, geology, and the biogeography of Croizat: a radical view. *Systematic Zoology* 31:304–316.

Craw, R. C. 1983. Panbiogeography and vicariance cladistics: Are they truly different? *Systematic Zoology* 32:431–438.

Craw, R. C., J. R. Grehan, and M. J. Heads. 1999. *Panbiogeography: tracking the history of life.* Oxford University Press, New York. 229 pp.

Crisp, M. D. 1994. Evolution of bird-pollination in some Australian legumes (Fabaceae), 281–309. *In:* Eggleton, P., and R. Vane-Wright (eds.), *Phylogenetics and Ecology.* Linnean Society Symposium Series, vol. 17. Academic Press, London and San Diego.

Croizat, L. 1962. *Space, Time, Form: The Biological Synthesis.* Published by the author, Caracas. 881 pp.

Crother, B. I. 2002. Is Karl Popper's philosophy of science all things to all people? *Cladistics* 18:445.

Crowson, R. A. 1970. *Classification and Biology.* Aldine, Chicago. 350 pp.

CSIRO. 1991. Hemiptera, 429–509 (chapter authors Carver, M., G. F. Gross, and T. E. Woodward). *In:* Naumann, I. D. (ed.), *The Insects of Australia, vol. 1.* Melbourne University Press, Melbourne. (Also published 1991 by Cornell University Press, Ithaca, New York)

Darlington, P. J. 1965. *Biogeography of the Southern End of the World: Distribution and History of Far-Southern Life and Land, with an Assessment of Continental Drift.* McGraw-Hill, New York. 236 pp.

Darlington, P. J., Jr. 1957. *Zoogeography: The Geographical Distribution of Animals.* John Wiley and Sons, New York. 675 pp.

Darwin, C. 1859. *On the Origin of Species.* John Murray, London. 513 pp.

Davis, J. I. 1995. A phylogenetic structure for the monocotyledons, as inferred from chloroplast DNA restriction site variation, and a comparison of measures of clade support. *Systematic Botany* 20:503–527.

Davis, J. I., and K. C. Nixon. 1992. Populations, genetic variation, and the delimitation of phylogenetic species. *Systematic Biology* 41:421–435.

Day, W. H. E., D. S. Johnson, and D. Sankoff. 1986. The computational complexity of inferring rooted phylogenies by parsimony. *Mathematical Bioscience* 81:33–42.

de Jong, R., R. I. Vane-Wright, and P. R. Ackery. 1996. The higher classification of butterflies (Lepidoptera): problems and prospects. *Entomologica Scandinavica* 27:65–101.

De Laet, J., and Smets E. 1998. On the three-taxon approach to parsimony analysis. *Cladistics* 14:363–381.

de Pinna, M. C. C. 1991. Concepts and tests of homology in the cladistic paradigm. *Cladistics* 7:367–394.

de Queiroz, A., M. J. Donoghue, and J. Kim. 1995. Separate versus combined analysis of phylogenetic evidence. *Annual Review of Ecology and Systematics* 26:657–681.

de Queiroz, K. 1988. Systematics and the Darwinian revolution. *Philosophy of Science* 55:238–259.

de Queiroz, K. 2004. The measurement of test severity, significance tests for resolution, and a unified philosophy of phylogenetic inference. *Zoologica Scripta* 33:463–473.

de Queiroz, K., and J. Gauthier. 1990. Phylogeny as a central principle in taxonomy: phylogenetic definitions of taxon names. *Systematic Zoology* 39:307–322.

de Queiroz, K., and S. Poe. 2001. Philosophy and phylogenetic inference: a comparison of likelihood and parsimony methods in the context of Karl Popper's writings on corroboration. *Systematic Biology* 50:305–321.

de Queiroz, K., and S. Poe. 2003. Failed refutations: further comments on parsimony and likelihood methods and their relationship to Popper's degree of corroboration. *Systematic Biology* 52:352–367.

Deleporte, P. 1993. Characters, attributes, and tests of evolutionary scenarios. *Cladistics* 9:427–432.

D'Erchia, A. M., C. Gissi, G. Pesole, C. Saccone, and U. Arnason. 1996. The guinea pig is not a rodent. *Nature* 381:597–600.

DeSalle, R., and A.V. Z. Brower. 1997. Process partitions, congruence, and the independence of characters: inferring relationships among closely-related Hawaiian *Drosophila* from multiple gene regions. *Systematic Biology* 46:751–764.

Dingus, L., and T. Rowe. 1998. *The Mistaken Extinction: Dinosaur Evolution and the Origin of Birds.* W. H. Freeman and Co., New York. 332 pp.

Dominguez, E., and Q. D. Wheeler. 1997. Taxonomic stability is ignorance. *Cladistics* 13:367–372.

Donoghue, M. J. 2001. A wish list for Systematic Biology. *Systematic Biology* 50:755–757.

Donoghue, P. C. J. 2005. Matters of the record. Saving the stem group—a contradiction in terms? *Paleobiology* 31:553–558.

Doyle, J. A., and M. J. Donoghue. 1986. Seed plant phylogeny and the origin of the angiosperms: an experimental approach. *The Botanical Review* 52:321–431.

Doyle, J. J. 1992. Gene trees and species trees: molecular systematics as one-character taxonomy. *Systematic Botany* 17:144–163.

Dyar, H. G., and F. Knab. 1906. The larvae of Culicidae classified as independent organisms. *Journal of the New York Entomological Society* 14:169–230, plates IV–XVI.

Ebach, M. C., and C. Holdrege. 2005. More taxonomy, not DNA barcoding. *BioScience* 55:822–823.

Edwards, A.W. F., and L. L. Cavalli-Sforza. 1964. Reconstruction of evolutionary trees, 67–76. *In:* Heywood, V. H., and J. McNeill (eds.), *Phenetic and Phylogenetic Classification.* Special Volume 6, The Systematics Association, London.

Eldredge, N., and S. J. Gould. 1972. Punctuated equilibria: an alternative to phyletic gradualism, 82–115. *In:* Schopf, T. J. M. (ed.), *Models in Paleobiology.* Cooper, Freeman and Co., San Francisco, California.

Elias, M., R. I. Hill, K. R. Willmott, K. K. Dasmahapatra, A.V. Z. Brower, J. Mallet, and C. D. Jiggins. 2007. Limited performance of DNA barcoding in a diverse community of tropical butterflies. *Proceedings of the Royal Society of London B* 274:2881–2889.

Encyclopedia of Life. http://www.eol.org/ [accessed 5 Jan. 2009].

Endler, J. A. 1982. Problems of distinguishing historical from ecological factors in biogeography. *American Zoologist* 22:441–452.

Engelmann, G. F., and E. O. Wiley. 1977. The place of ancestor-descendent relationships in phylogeny reconstruction. *Systematic Zoology* 26:1–11.

Enghoff, H. 1995. Historical biogeography of the Holarctic: area relationships, ancestral areas, and dispersal of non-marine animals. *Cladistics* 11:223–263.

Ereshefsky, M. (ed.). 1992. *The Units of Evolution: Essays on the Nature of Species.* MIT Press, Cambridge, Massachusetts. 405 pp.

Erwin, T. L. 1991. An evolutionary basis for conservation strategies. *Science* 253:750–752.

Eschmeyer, W. N. 1990. *Catalog of the Genera of Recent Fishes.* California Academy of Sciences, San Francisco. 697 pp.

Estabrook, G. F., J. G. Strauch, Jr., and K. L. Fiala. 1977. An application of compatibility analysis to the Blackith's data on orthopteroid insects. *Systematic Zoology* 26:269–276.

Evenhuis, N. L., T. Pape, A. C. Pont, and F. C. Thompson (eds.). 2009. Biosystematic Database of World Diptera (Version 5 May 2008). http://www.diptera.org/biosys.htm [accessed on 5 Jan. 2009].

Faith, D. P. 1992. On corroboration: a reply to Carpenter. *Cladistics* 8:265–273.

Faith, D. P., and P. S. Cranston. 1991. Could a cladogram this short have arisen by chance alone?: on a permutation test for cladistic structure. *Cladistics* 7:1–28.

Faith, D. P., and J. W. H. Trueman. 2001. Towards an inclusive philosophy for phylogenetic inference. *Systematic Biology* 50:331–350.

Faivovich, J., C. F. B. Haddad, P. C. A. Garcia, D. R. Frost, J. A. Campbell, and W. C. Wheeler. 2005. Systematic review of the frog family Hylidae, with special reference to Hylinae: phylogenetic analysis and taxonomic revision. *Bulletin of the American Museum of Natural History* 294:1–240.

Farrell, B., and C. Mitter. 1990. Phylogenesis of insect/plant interactions: Have *Phyllobrotica* leaf beetles (Chrysomelidae) and the Lamiales diversified in parallel? *Evolution* 44:1389–1403.

Farris, J. A., et al. 1995. Explanation. *Cladistics* 11:211–218.

Farris, J. S. 1969. A successive approximations approach to character weighting. *Systematic Zoology* 18:374–385.

Farris, J. S. 1970. Methods for computing Wagner trees. *Systematic Zoology* 19:83–92.

Farris, J. S. 1971. The hypothesis of nonspecificity and taxonomic congruence. *Annual Review of Ecology and Systematics* 2:277–302.

Farris, J. S. 1972. Estimating phylogenetic trees from distance matrices. *American Naturalist* 106:645–668.

Farris, J. S. 1974. Formal definitions of paraphyly and polyphyly. *Systematic Zoology* 23:548–554.

Farris, J. S. 1976a. Expected asymmetry of phylogenetic trees. *Systematic Zoology* 25: 196–198.

Farris, J. S. 1976b. Phylogenetic classification of fossils with Recent species. *Systematic Zoology* 25:271–282.

Farris, J. S. 1977. Phylogenetic analysis under Dollo's Law. *Systematic Zoology* 26:77–88.

Farris, J. S. 1979. The information content of the phylogenetic system. *Systematic Zoology* 28:483–519.

Farris, J. S. 1981. Distance data in phylogenetic analysis, 3–23. *In:* Funk, V. A., and D. R. Brooks (eds.), *Advances in Cladistics. Proceedings of the First Meeting of the Willi Hennig Society.* New York Botanical Garden, Bronx, New York.

Farris, J. S. 1982. Simplicity and informativeness in systematics and phylogeny. *Systematic Zoology* 31:413–444.

Farris, J. S. 1983. The logical basis for phylogenetic analysis, 1–36. *In:* Platnick, N. I., and V. A. Funk (eds.), *Advances in Cladistics.* Vol. 2, *Proceedings of the Second Meeting of the Willi Hennig Society.* Columbia University Press, New York.

Farris, J. S. 1988. Hennig86. Photocopied documentation of computer program.

Farris, J. S. 1989. The retention index and rescaled consistency index. *Cladistics* 5:417–419.

Farris, J. S. 1995. Conjectures and refutations. *Cladistics* 11:105–118.

Farris, J. S., and A. G. Kluge. 1979. A botanical clique. *Systematic Zoology* 28:400–411.
Farris, J. S., A. G. Kluge, and J. M. Carpenter. 2001. Popper and likelihood versus "Popper*." *Systematic Biology* 50:438–444.
Farris, J. S., A. G. Kluge, and M. J. Eckhardt. 1970. A numerical approach to phylogenetic systematics. *Systematic Zoology* 19:172–191.
Farris, J. S., and A. G. Kluge. 1979. A botanical clique. *Systematic Zoology* 28:400–411.
Farris, J. S., M. Källersjö, A. G. Kluge, and C. Bult. 1994. Testing significance of congruence. *Cladistics* 10:315–320.
Farris, J. S., M. Källersjö, A. G. Kluge, and C. Bult. 1995. Constructing a significance test for incongruence. *Systematic Biology* 44:570–572.
Farris, J. S., V. A. Albert, M. Källersjö, D. Lipscomb, and A. G. Kluge. 1996. Parsimony jackknifing outperforms neighbor-joining. *Cladistics* 12:99–124.
Felsenstein, J. 1973. Maximum likelihood and minimum-steps methods for estimating evolutionary trees from data on discrete characters. *Systematic Zoology* 22:240–249.
Felsenstein, J. 1978. Cases in which parsimony or compatibility methods will be positively misleading. *Systematic Zoology* 27:401–410.
Felsenstein, J. 1981. A likelihood approach to character weighting and what it tells us about parsimony and compatibility. *Biological Journal of the Linnean Society* 16:183–196.
Felsenstein, J. 1983. Parsimony in systematics: biological and statistical issues. *Annual Review of Ecology and Systematics* 14:313–333.
Felsenstein, J. 1985. Confidence limits on phylogenies: an approach using the bootstrap. *Evolution* 39:783–791.
Felsenstein, J. 2004. *Inferring Phylogenies.* Sinauer Associates, Sunderland, Massachusetts. 664 pp.
Fichman, M. 1977. Wallace: zoogeography and the problem of land bridges. *Journal of the History of Biology* 10:45–63.
Fieber, F. X. 1860. *Die europäischen Hemiptera. Halbflügler (Rhychota Heteroptera).* Carl Gerold's Sohn, Wien.
Fish Net 2. 2005. http://www.fishnet2.net/index.html. © 2005 FishNet 2 [accessed 5 Jan. 2009].
Fitch, W. M. 1970. Distinguishing homologous from analogous proteins. *Systematic Zoology* 19:99–113.
Fitch, W. M. 1971. Toward defining the course of evolution: minimum change for a specific tree topology. *Systematic Zoology* 20:406–416.
Fitzhugh, K. 2006. The abduction of phylogenetic hypotheses. *Zootaxa* 1145:1–110.
Foulds, L. R., M. D. Hendy, and D. Penny. 1979. A graph theoretic approach to the development of minimal phylogenetic trees. *Journal of Molecular Evolution* 13:127–149.
Franz, N. M. 2005. Outline of an explanatory account of cladistic practice. *Biology and Philosophy* 20:489–515.
Freeman, S. 2008. *Biological Science.* 3rd ed. Pearson Prentice Hall, Upper Saddle River, New Jersey. 1262 pp.
Friç, Z., N. Wahlberg, P. Pech, and J. Zrzavý. 2007. Phylogeny and classification of the *Phengaris-Maculinea* clade (Lepidoptera: Lycaenidae): total evidence and phylogenetic species concepts. *Systematic Entomology* 32:558–567.
Futuyma, D. J. 1998. *Evolutionary Biology.* 3rd ed. Sinauer Associates, Sunderland, Massachusetts. 763+ pp.
Futuyma, D. J., and S. S. McCafferty. 1990. Phylogeny and evolution of host plant associations in the leaf beetle genus *Ophraella* (Coleoptera: Chrysomelidae). *Evolution* 44:1885–1913.

Gaffney, E. S. 1979a. An introduction to the logic of phylogeny reconstruction, 79–111. *In:* Cracraft, J., and N. Eldredge (eds.), *Phylogenetic Analysis and Paleontology.* Columbia University Press, New York.

Gaffney, E. S. 1979b. Tetrapod monophyly: a phylogenetic analysis. *Bulletin of the Carnegie Museum of Natural History* 13:92–105.

Gatesy, J. 2007. A tenth crucial question regarding model use in phylogenetics. *Trends in Ecology and Evolution* 22:509–510.

Gatesy, J., and R. H. Baker. 2005. Hidden likelihood support in genomic data: can forty-five wrongs make a right? *Systematic Biology* 54:483–492.

Gatesy, J., M. Milinkovitch, V. Waddell, and M. Stanhope. 1999a. Stability of cladistic relationships between Cetacea and higher-level artiodactyl taxa. *Systematic Biology* 48:6–20.

Gatesy, J., P. O'Grady, and R. H. Baker. 1999b. Corroboration among data sets in simultaneous analysis: hidden support for phylogenetic relationships among higher-level artiodactyl taxa. *Cladistics* 15:271–313.

Gatesy, J., C. Matthee, R. DeSalle, and C. Hayashi. 2002. Resolution of a supertree/supermatrix paradox. *Systematic Biology* 51:652–664.

GBIF (Global Biodiversity Information Facility). 2007. http://www.gbif.org/ [accessed 20 March 2008].

Geoffroy St. Hilaire, E. 1818. *Philosophie anatomique: des organs respiratoires sous le rapport de la determination et de l'identité de leurs pieces osseuses.* Paris.

Ghiselin, M. T. 1966. On psychologism in the logic of taxonomic controversies. *Systematic Zoology* 15:207–215.

Ghiselin, M. T. 1984. "Definition," "character," and other equivocal terms. *Systematic Zoology* 33:104–110.

Gilmour, J. S. L. 1940. Taxonomy and philosophy, 461–474. *In:* Huxley, J. S. (ed.), *The New Systematics.* Oxford University Press, Oxford.

Giribet, G., and W. C. Wheeler. 2007. The case for sensitivity: a response to Grant and Kluge. *Cladistics* 23:294–296.

Gladstein, D. S. 1997. Efficient incremental character optimization. *Cladistics* 13:21–26.

Goldman, N. 1990. Maximum likelihood inference of phylogenetic trees, with special reference to a Poisson process model of DNA substitution and to parsimony analyses. *Systematic Zoology* 39:345–361.

Goloboff, P. A. 1991. Homoplasy and the choice among cladograms. *Cladistics* 7:215–232.

Goloboff, P. A. 1993. Estimating character weights during tree search. *Cladistics* 9:83–91.

Goloboff, P. A. 1994. Character optimization and calculation of tree lengths. *Cladistics* 9:433–436.

Goloboff, P. A. 1996. Methods for faster parsimony analysis. *Cladistics* 12:199–220.

Goloboff, P. A. 1998. *Principios básicos de cladistica.* Sociedad Argentina de Botanica, Buenos Aires. 81 pp.

Goloboff, P. A. 1999. Analyzing large data sets in reasonable times: solutions for composite optima. *Cladistics* 15:415–428.

Goloboff, P. A. 2003. Parsimony, likelihood, and simplicity. *Cladistics* 19:91–103.

Goloboff, P. A. 2005a. NDM/VNDM programs for the identification of areas of endemism. http://www.zmuc.dk/public/phylogeny/endemism.

Goloboff, P. A. 2005b. Minority rule supertrees? MRP, compatibility, and minimum flip may display the least frequent groups. *Cladistics* 21:282–294.

Goloboff, P. A., C. I. Mattoni, and A. S. Quinteros. 2006. Continuous characters analyzed as such. *Cladistics* 22:589–601.

Goloboff, P. A., J. M. Carpenter, J. S. Arias, and D. R. M. Esquivel. 2008. Weighting against homoplasy improves phylogenetic analysis of morphological data sets. *Cladistics* 24:758–773.

Goodman, M., J. Czelusniak, G. W. Moore, A. E. Romero-Herrera, and G. Matsuda. 1979. Fitting the gene lineage into its species lineage: a parsimony strategy illustrated by cladograms constructed from globin sequences. *Systematic Zoology* 28:132–163.

Gould, S. J. 1974. The evolutionary significance of "bizarre" structures: antler size and skull size in the "Irish elk," *Megaloceros giganteus. Evolution* 28:191–220.

Gould, S. J. 1985. A clock of evolution: We finally have a method for sorting out homologies from "subtle as subtle can be" analogies. *Natural History* 94:12–25.

Grant, T. 2002. Testing methods: the evaluation of discovery operations in evolutionary biology. *Cladistics* 18:94–111.

Grant, T., and A. G. Kluge. 2003. Data exploration in phylogenetic inference: scientific, heuristic, or neither. *Cladistics* 19:379–418.

Grant, T., and A. G. Kluge. 2005. Stability, sensitivity, science and heurism. *Cladistics* 21:597–604.

Gray, H. 1918. *Anatomy of the Human Body.* Lea and Febiger, Philadelphia.

Guindon, S., and O. Gascuel. 2003. A simple, fast, and accurate algorithm to estimate large phylogenies by maximum likelihood. *Systematic Biology* 52:696–704.

Guttmann, W. F. 1977. Phylogenetic reconstruction: theory, methodology, and application to chordate evolution, 645–669. *In:* Hecht, M. K., P. C. Goody, and B. M. Hecht (eds.), *Major Patterns of Vertebrate Evolution.* Plenum Press, New York.

Hackett, S. J., R. T. Kimball, S. Reddy, R. C. K. Bowie, E. L. Braun, M. J. Braun, J. L. Chojnowski, A. Cox, K. Han, J. Harshman, G. J. Huddleston, B. D. Marks, K. J. Miglia, W. S. Moore, F. H. Sheldon, D. W. Steadman, C. C. Witt, and Y. Tamaki. 2008. A phylogenomic study of birds reveals their evolutionary history. *Science* 320:1763–1768.

Haeckel, E. 1866. *Generelle Morphologie der Organismen.* G. Reimer, Berlin.

Haffer, J. 1997. Forward. Species concepts and species limits in ornithology. pp. 11–24. *In:* del Hoyo, J., A. Elliott, and J. Sargatal (eds.), *Handbook of the Birds of the World.* Vol. 4. *Sandgrouse to Cuckoos.* Lynx Ediciones, Barcelona.

Hafner, M. S., and S. A. Nadler. 1988. Phylogenetic trees support the coevolution of parasites and their hosts. *Nature* 332:258–259.

Hafner, M. S., and S. A. Nadler. 1990. Co-speciation in host-parasite assemblages: comparative analysis of rates of evolution and timing of cospeciation. *Systematic Zoology* 39:192–204.

Harold, A. S., and R. D. Mooi. 1994. Areas of endemism: definition and recognition criteria. *Systematic Biology* 43:261–266.

Harvey, P. H., and M. D. Pagel. 1991. *The Comparative Method in Evolutionary Biology.* Oxford University Press, New York.

Hay, O. P. 1902. *Bibliography and Catalog of Fossil Vertebrata of North America.* Bulletin of United States Geological Survey 179:1–239.

Hebert, P. D. N., A. Cywinska, S. L. Ball, and J. R. deWaard. 2003a. Biological identifications through DNA barcodes. *Proceedings of the Royal Society of London B* 270:313–321.

Hebert, P. D. N., S. Ratnasingham, and J. R. deWaard. 2003b. Barcoding animal life: cytochrome c oxidase subunit 1 divergences among closely related species. *Proceedings of the Royal Society of London B (suppl.)* DOI 10.1098/rsbl.2003.0025.

Hebert, P. D. N., E. H. Penton, J. M. Burns, D. H. Janzen, and W. Hallwachs. 2004. Ten species in one: DNA barcoding reveals cryptic species in the neotropical skipper butterfly *Astraptes fulgerator*. *Proceedings of the National Academy of Sciences USA* 101:14812–14817.

Hedges, S. B., and L. R. Maxson. 1996. Re: molecules and morphology in amniote phylogeny. *Molecular Phylogenetics and Evolution* 6:312–314.

Helfenbein, K. G., and R. DeSalle. 2005. Falsifications and corroborations: Karl Popper's influence on systematics. *Molecular Phylogenetics and Evolution* 35:271–280.

Hennig, W. 1960. Die Dipteren-Fauna von Neuseeland als systematische und tiergeographisches Problem. *Beiträge zur Entomologie* 10:221–329. [English translation by: Wygodzinsky, P. 1966. The Diptera fauna of New Zealand as a problem in systematics and biogeography. *Pacific Insects Monograph* 9:1–81].

Hennig, W. 1965. Phylogenetic Systematics. *Annual Review of Entomology* 10:97–116.

Hennig, W. 1966. *Phylogenetic Systematics.* University of Illinois Press, Urbana. 263 pp.

Hennig, W. 1969. *Die Stammesgeschichte der Insekten.* Waldemar Kramer, Frankfurt am Mein.

Hennig, W. 1981. *Insect Phylogeny.* Wiley, New York. 514 pp.

Henry, T. J., and A. G. Wheeler, Jr. 1988. Family Miridae. pp. 251–520. *In: Catalog of Heteroptera, or True Bugs, of Canada and the Continental United States.* E. J. Brill, Leiden.

HerpNet. 2008. http://www.herpnet.org/ [accessed 5 Jan. 2009].

Hey, J. 2001. *Genes, Categories, and Species.* Oxford University Press, Oxford. 240 pp.

Higgins, D. G., and P. M. Sharp. 1988. CLUSTAL: a package for performing multiple sequence alignment on a microcomputer. *Gene* 73:237–244.

Hillis, D. M., C. Moritz, and B. K. Mable (eds.). 1996. *Molecular Systematics.* 2nd ed. Sinauer Associates, Sunderland, Massachusetts. 655 pp.

Holder, M., and P. O. Lewis. 2003. Phylogeny estimation: traditional and Bayesian approaches. *Nature Reviews: Genetics* 4:275–284.

Holmgren, P. K., and N. H. Holmgren. 1998 [continuously updated]. *Index Herbariorum: A Global Directory of Public Herbaria and Associated Staff.* New York Botanical Garden's Virtual Herbarium. http://sweetgum.nybg.org/ih/. © 2007 The New York Botanical Garden [accessed 9 Jan. 2009].

Howard, D. J., and S. H. Berlocher (eds). 1998. *Endless Forms.* Oxford University Press, Oxford. 470 pp.

Huelsenbeck, J. P. 1997. Is the Felsenstein zone a fly trap? *Systematic Biology* 46:69–74.

Huelsenbeck, J. P., B. Larget, R. E. Miller, and F. Ronquist. 2002. Potential application and pitfalls of Bayesian inference of phylogeny. *Systematic Biology* 51:673–688.

Hugot, J.-P. 2003. New evidence for hystricognath rodent monophyly from the phylogeny of their pinworms, 144–173. *In:* Page, R. D. M. (ed.), *Tangled Trees: Phylogeny, Cospeciation, and Coevolution.* University of Chicago Press, Chicago.

Hull, D. L. 1965. The effect of Essentialism on taxonomy: two thousand years of stasis. *British Journal of the Philosophy of Science* 15:314–326; 16:1–18 (reprinted in Ereshefsky, M. (ed.). 1992. *The Units of Evolution. Essays on the Nature of Species.* MIT Press, Cambridge, Massachusetts).

Hull, D. L. 1970. Contemporary systematic philosophies. *Annual Review of Ecology and Systematics* 1:19–54.

Hull, D. L. 1983. Karl Popper and Plato's metaphor, 177–189. *In:* Platnick, N. I., and V. A. Funk, *Advances in Cladistics.* Vol. 2, *Proceedings of the Second Meeting of the Willi Hennig Society.* Columbia University Press, New York.

Humphries, C. J., and L. R. Parenti. 1999. *Cladistic Biogeography: Interpreting Patterns of Plant and Animal Distributions.* 2nd ed. Oxford University Press, Oxford. 187 pp.

Index Animalium. http://www.sil.si.edu/digitalcollections/indexanimalium/ Smithsonian Libraries, Washington, D.C. [accessed 26 Aug. 2008].

Index Kewensis. CD-ROM version. Oxford University Press, Oxford.

Index of Organism Names. http://www.organismnames.com. © 2008 Thomson Reuters [accessed 26 Aug. 2008].

International Code of Botanical Nomenclature (Vienna Code). 2006. Regnum Vegetabile 146. A. R. G. Gantner Verlag KG. ISSN 0080-0694. http://ibot.sav.sk/icbn/main.htm [accessed 23 Feb. 2008].

International Code of Nomenclature for Cultivated Plants. 2004. Acta Horticulturae, 647. International Society for Horticultural Science (ISHS). Leuven, Belgium.

International Code of Nomenclature of Bacteria (1990 revision). 1992. International Union of Microbiological Societies. http://www.ncbi.nlm.nih.gov/books/bv.fcgi?rid=icnb.TOC&depth=2 [accessed 5 Jan. 2009].

International Code of Zoological Nomenclature (4th ed.). 1999. International Trust for Zoological Nomenclature. The Natural History Museum, London. http://www.iczn.org/iczn/index.jsp [accessed 23 Feb. 2008].

International Commission on Zoological Nomenclature. 2008. Proposed amendment of the International Code of Zoological Nomenclature to expand and refine methods of publication. *Zootaxa* 1908:57–67.

International Plant Names Index (IPNI). 2004. CD-ROM. http://www.ipni.org/index.html [accessed 9 Mar. 2008].

Jefferies, R. P. S. 1979. The origin of chordates: a methodological essay, 443–447. *In:* House, M. R. (ed.), *The Origin of Major Invertebrate Groups.* Systematics Association Special Vol. 12. Academic Press, London.

Jobb, G., A. von Haeseler, and K. Strimmer. 2004. TREEFINDER: a powerful graphical analysis environment for molecular phylogenetics. *BMC Evolutionary Biology* 4:18 doi: 10.1186/1471-2148-4-18.

Johnson, K., and D. H. Clayton. 2003. Coevolutionary history of ecology replicates: comparing phylogenies of wing and body lice to columbiform hosts, 262–286. *In:* Page, R. D. M. (ed.), *Tangled Trees: Phylogeny, Cospeciation, and Coevolution.* University of Chicago Press, Chicago.

Johnson, N. F. 2007. Hymenoptera Name Server. http://osuc.biosci.ohio-state.edu:7777/hymenoptera/nomenclator.home_page [accessed 5 Jan. 2009].

Judd, D. D. 1998. Exploring component stability using life-stage concordance in sabethine mosquitoes (Diptera: Culicidae). *Cladistics* 14:63–94.

Judd, W. S., C. S. Campbell, E. A. Kellong, P. F. Stevens, and M. J. Donoghue. 2007. *Plant Systematics: A Phylogenetic Approach,* 3rd edition. Sinauer Associates, Sunderland, Massachusetts. 620 pp.

Källersjö, M., V. A. Albert, and J. S. Farris. 1999. Homoplasy increases phylogenetic structure. *Cladistics* 15:91–94.

Kearney, M. 2002. Fragmentary taxa, missing data, and ambiguity: mistaken assumptions and conclusions. *Systematic Biology* 51:369–381.

Keller, R. A., R. N. Boyd, and Q. D.Wheeler. 2003. The illogical basis of phylogenetic nomenclature. *Botanical Review* 69:93–110.

Kew Record of Taxonomic Literature. http://kbd.kew.org/kbd/searchpage.do [accessed 9 Jan. 2009].

Kitching, I. J., P. L. Forey, C. J. Humphries, and D. M. Williams. 1998. *Cladistics: The Theory and Practice of Parsimony Analysis.* Oxford University Press, Oxford. 228 pp.

Kluge, A. G. 1983. Cladistics and the classification of the great apes, 151–177. *In:* Ciochon, R. L., and R. S. Corruccini (eds.), *New Interpretations of Ape Ancestry.* Plenum Press, New York.

Kluge, A. G. 1985. Ontogeny and phylogenetic systematics. *Cladistics* 1:13–27.

Kluge, A. G. 1989. A concern for evidence and a phylogenetic hypothesis of relationships among *Epicrates* (Boidae, Serpentes). *Systematic Zoology* 38:7–25.

Kluge, A. G. 1997. Testability and the refutation and corroboration of cladistic hypotheses. *Cladistics* 13:81–96.

Kluge, A. G. 2001. Parsimony with and without scientific justification. *Cladistics* 17:199–210.

Kluge, A. G. 2003. The repugnant and the mature in phylogenetic inference: atemporal similarity and historical identity. *Cladistics* 19:356–368.

Kluge, A. G. 2005. Testing lineage and comparative methods for inferring adaptation. *Zoologica Scripta* 34:653–663.

Kluge, A. G., and J. S. Farris. 1969. Quantitative phyletics and the evolution of anurans. *Systematic Zoology* 18:1–32.

Kluge, A. G., and T. Grant. 2006. From conviction to anti-superfluity: old and new justifications of parsimony in phylogenetic influence. *Cladistics* 22:276–288.

Kluge, A. G., and A. J. Wolf. 1993. Cladistics: What's in a word? *Cladistics* 9:183–199.

Kolaczkowski, B., and J. W. Thornton. 2004. Performance of maximum parsimony and likelihood phylogenetics when evolution is heterogeneous. *Nature* 431:980–984.

Kristensen, N. P. 1981. Phylogeny of insect orders. *Annual Review of Entomology* 26: 135–157.

Laamanen, T. R., R. Meier, M. A. Miller, A. Hille, and B. M. Wiegmann. 2005. Phylogenetic analysis of *Themira* (Sepsidae: Diptera): sensitivity analysis, alignment, and indel treatment in a multigene study. *Cladistics* 21:258–271.

Lakatos, I. 1974. Popper on demarcation and induction, 241–273. *In:* P. A. Schlipp (ed.), *The Philosophy of Karl Popper*. Open Court, La Salle, Illinois.

Lamas, G. (ed.). 2004. *Atlas of Neotropical Lepidoptera. Checklist: Part 4A Hesperioidea–Papiionoidea.* Scientific Publishers/Association of Tropical Lepidoptera, Gainesville, Florida. 439 pp.

Lankester, E. R. 1870. On the use of the term homology in modern zoology, and the distinction between homogenetic and homoplastic agreements. *Annals and Magazine of Natural History,* ser. 4, 6:34–43.

Lanyon, S. M. 1985. Detecting internal inconsistencies in distance data. *Systematic Zoology* 34:397–403.

Lanyon, S. M. 1993. Phylogenetic frameworks: towards a firmer foundation for the comparative approach. *Biological Journal of the Linnean Society* 49:45–61.

Lawrence, G. H. M. 1951. *Taxonomy of Vascular Plants.* Macmillan Co., New York. 823 pp.

Le Quesne, W. J. 1969. A method of selection of characters in numerical taxonomy. *Systematic Zoology* 18:201–205.

Lee, M. S. Y., and A. F. Hugall. 2003. Partitioned likelihood support and the evaluation of data set conflict. *Systematic Biology* 52:15–22.

Lewis, P. O. 2001. A likelihood approach to estimating phylogeny from discrete morphological character data. *Systematic Biology* 50:913–925.

Lewontin, R. C. 1978. Adaptation. *Scientific American* 239:213–230.

Lin, Y.-H., P. A. McLenachan, A. R. Gore, M. J. Phillips, R. Ota, M. D. Hendy, and D. Penny. 2002. Four new mitochondrial genomes and the increased stability of evolutionary trees of mammals from improved taxon sampling. *Molecular Biology and Evolution* 19:2060–2070.

Linnaeus, C. 1753. *Species Plantarum.* Laurentii Salvii, Stockholm.

Linnaeus, C. 1758. *Systema Naturae.* 10th ed. Laurentii Salvii, Stockholm.

Lipscomb, D. L. 1992. Parsimony, homology, and the analysis of multistate characters. *Cladistics* 8:45–65.

Loconte, H., and D. W. Stevenson. 1990. Cladistics of the Spermatophyta. *Brittonia* 42: 197–211.

Loconte, H., and D. W. Stevenson. 1991. Cladistics of the Magnoliidae. *Cladistics* 7: 267–296.

Löytynoja, A., and N. Goldman. 2008. Phylogeny-aware gap placement prevents errors in sequence alignment and evolutionary analysis. *Science* 320:1632–1635.

Lundberg, J. G. 1972. Wagner networks and ancestors. *Systematic Zoology* 21:398–413.

Lynch, M., and J. S. Conery. 2003. The origins of genome complexity. *Science* 302: 1401–1404.

Mabberley, D. J. 2008. *The Plant Book: A Portable Dictionary of the Higher Plants.* 3rd ed. Cambridge University Press, Cambridge. 1040 pp.

Maddison, D. R. 1991. The discovery and importance of multiple islands of most parsimonious trees. *Systematic Zoology* 40:315–328.

Maddison, D. R., and W. P. Maddison. 1992. MacClade, version 3: Analysis of Phylogeny and Character Evolution. Sinauer Associates, Sunderland, Massachusetts.

Maddison, D. R., and K.-S. Schulz (eds.). 1996–2008. The Tree of Life Web Project. http://tolweb.org [accessed 16 Mar. 2008].

Maddison, W. P. 1997. Gene trees and species trees. *Systematic Biology* 46:523–536.

Maddison, W. P., M. J. Donoghue, and D. R. Maddison. 1984. Outgroup analysis and parsimony. *Systematic Zoology* 33:83–103.

MANIS. 2008. http://www.manisnet.org/; rev. 19. University of California, Berkeley. Copyright © 2001–2008, The Regents of the University of California [accessed 5 Jan. 2009].

Margush, T., and F. R. McMorris. 1981. Consensus n-trees. *Bulletin of Mathematical Biology* 43:239–244.

Martins, E. P. (ed.). 1996. *Phylogenies and the Comparative Method in Animal Behavior.* Oxford University Press, Oxford. 432 pp.

Maslin, T. P. 1952. Morphological criteria of phyletic relationships. *Systematic Zoology* 1:49–70.

May, R. M. 1990. Taxonomy as destiny. *Nature* 347:129–130.

Mayden, R. L. 1988. Vicariance biogeography, parsimony, and evolution in North American freshwater fishes. *Systematic Zoology* 37:329–355.

Mayr, E. 1974. Cladistic analysis or cladistic classification? *Zeitschrift für Zoologische Systematik und Evolutionsforschung* 12:94–128.

Mayr, E. 1982. *The Growth of Biological Thought. Diversity, Evolution, and Inheritance.* Harvard University Press, Belknap Press, Cambridge, Massachusetts, and London. 974 pp.

Mayr, E. 1988. *Toward a New Philosophy of Biology. Observations of an Evolutionist.* Harvard University Press, Cambridge, Massachusetts. 564 pp.

Mayr, E., E. G. Linsley, and R. L. Usinger. 1953. *Methods and Principles of Systematic Zoology.* McGraw-Hill, New York. 328 pp.

McGlone, M. 2005. Goodbye Gondwana. *Journal of Biogeography* 32:739–740.

McKenna, M. C., and S. K. Bell. 1997. *Classification of Mammals above the Species Level.* Columbia University Press, New York. [Part I: History and Theory of Classification]. 640 pp.

Meier, R. 1994. On the inappropriateness of presence/absence coding for non-additive multistate characters in computerized cladistic analysis. *Zoologischer Anzeiger* 232: 201–212.

Meier, R., K. Shiyang, G. Vaidya, and P. K. L. Ng. 2006. DNA barcoding and taxonomy in Diptera: a tale of high intraspecific variability and low identification success. *Systematic Biology* 55:715–728.

Meyer, C. P., and G. Paulay. 2005. DNA barcoding: error rates based on comprehensive sampling. *PLoS Biology* 3:e422 (10 pp.).

Michener, C. D. 1953. Life history studies in insect systematics. *Systematic Zoology* 2: 112–118.

Michener, C. D. 1963. Some future developments in taxonomy. *Systematic Zoology* 12: 151–172.

Michener, C. D. 1977. Discordant evolution and the classification of allodapine bees. *Systematic Zoology* 26:32–56.

Mickevich, M. F. 1978. Taxonomic congruence. 1978. *Systematic Zoology* 27:143–158.

Mickevich, M. F. 1982. Transformation series analysis. *Systematic Zoology* 31:461–468.

Mickevich, M. F., and J. S. Farris. 1981. The implications of congruence in *Menidia. Systematic Zoology* 30:351–370.

Mickevich, M. F., and D. Lipscomb. 1991. Parsimony and the choice between different transformations of the same character set. *Cladistics* 7:111–139.

Mickevich, M. F., and C. Mitter. 1981. Treating polymorphic characters in systematics: a phylogenetic treatment of electrophoretic data, 45–58. *In:* Funk, V. A., and D. R. Brooks (eds.), *Advances in Cladistics. Proceedings of the First Meeting of the Willi Hennig Society.* New York Botanical Garden, Bronx, New York.

Mickevich, M. F., and N. I. Platnick. 1989. On the information content of classifications. *Cladistics* 5:33–47.

Mill, J. S. 1843. *A System of Logic—Ratiocinative and Inductive.* Longman, London.

Miller, J. S. 1987. Host-plant relationships in the Papilionidae (Lepidoptera): parallel cladogenesis or colonization? *Cladistics* 3:105–120.

Miller, J. S., A.V. Z. Brower, and R. DeSalle. 1997. Phylogeny of the neotropical moth tribe Josiini (Notodontidae: Dioptinae): comparing and combining evidence from DNA sequences and morphology. *Biological Journal of the Linnean Society* 60:297–316.

Miller, J. S., and J. W. Wenzel. 1995. Ecological characters and phylogeny. *Annual Review of Entomology* 40:389–415.

Milne-Edwards, H. 1844. Considérations sur quelques principes relatifs à la classification naturelle des animaux. *Annales des Sciences Naturelles* (3rd ser.) 1:65–99.

Mindell, D. P. 1991. Aligning DNA sequences: homology and phylogenetic weighting, 73–89. *In:* Miyamoto, M. J., and J. Cracraft (eds.), *Phylogenetic Analysis of DNA Sequences.* Oxford University Press, New York.

Mitchell, P. C. 1901. On the intestinal tract of birds; with remarks on the valuation and nomenclature of zoological characters. *Transactions of the Linnean Society. London, Zoological Series 2,* 8:173–275.

Mitter, C., B. Farrell, and B. Wiegmann. 1988. The phylogenetic study of adaptive zones: Has phytophagy promoted insect diversification? *American Naturalist* 132:107–128.

Mittermeier, R. A., P. Robles Gil, M. Hoffmann, J. Pilgrim, T. Brooks, C. G. Mittermeier, J. Lamoreux, and G. A. B. da Fonseca. 2005. *Hotspots Revisited: Earth's Biologically Richest and Most Endangered Terrestrial Ecoregions.* Conservation International.

Miyamoto, M. M. 1985. Consensus cladograms and general classifications. *Cladistics* 1:186–189.

Miyamoto, M. M., and W. M. Fitch. 1995. Testing species phylogenies and phylogenetic methods with congruence. *Systematic Biology* 44:64–76.

Morrone, J. J., and J. M. Carpenter. 1994. In search of a method for cladistic biogeography: an empirical comparison of component analysis, Brooks parsimony analysis, and three-area statements. *Cladistics* 10:99–153.

Mueller, U. G., S. A. Rehner, and T. R. Schultz. 1998. The evolution of agriculture in ants. *Science* 281:2034–2038.

Myers, N. 1988. Threatened biotas: "hot spots" in tropical forests. *The Environmentalist* 8:187–208.

Myers, N., R. A. Mittermeier, C. G. Mittermeier, G. A. B. da Fonseca, and J. Kent. 2000. Biodiversity hotspots for conservation priorities. *Nature* 403:853–858.

NCBI (National Center for Biotechnology Information). 2008. http://www.ncbi.nlm.nih.gov/ [accessed 20 March 2008].

Neave, S. A. 1939–1996. *Nomenclator Zoologicus.* 10 vols. Zoological Society of London, London. http://uio.mbl.edu/NomenclatorZoologicus/ [version 0.86, accessed 22 Jan. 2007].

Nelson, G. 1971. Paraphyly and polyphyly: redefinitions. *Systematic Zoology* 20:471–472.

Nelson, G. 1972. Phylogenetic relationship and classification. *Systematic Zoology* 21: 227–231.

Nelson, G. 1973. The higher-level phylogeny of vertebrates. *Systematic Zoology* 22:87–91.

Nelson, G. 1974. Classification as an expression of phylogenetic relationships. *Systematic Zoology* 22:344–359.

Nelson, G. 1978a. From Candolle to Croizat: comments on the history of biogeography. *Journal of the History of Biology* 11:269–305.

Nelson, G. 1978b. Ontogeny, phylogeny, paleontology, and the biogenetic law. *Systematic Zoology* 27:324–345.

Nelson, G. 1979. Cladistic analysis and synthesis: principles and definitions, with a historical note on Adanson's *Familles des Plantes (1763–1764). Systematic Zoology* 28:1–21.

Nelson, G. 1985. Outgroups and ontogeny. *Cladistics* 1:29–45.

Nelson, G., and P. Y. Ladiges. 1996. Paralogy in cladistic biogeography and analysis of paralogy-free subtrees. *American Museum Novitates* 3167:1–44.

Nelson, G., and N. I. Platnick. 1980. Multiple branching in cladograms: two interpretations. *Systematic Zoology* 29:86–91.

Nelson, G., and N. I. Platnick. 1981. *Systematics and Biogeography: Cladistics and Vicariance.* Columbia University Press, New York. 567 pp.

Nelson, G., and N. I. Platnick. 1991. Three-taxon statements: a more precise use of parsimony? *Cladistics* 7:351–366.

Nixon, K. C. 1999. The parsimony ratchet, a new method for rapid parsimony analysis. *Cladistics* 15:407–414.

Nixon, K. C. 2000. WinClada. Computer program.

Nixon, K. C., and J. M. Carpenter. 1993. On outgroups. *Cladistics* 9:413–426.

Nixon, K. C., and J. M. Carpenter. 1996. On simultaneous analysis. *Cladistics* 12:221–241.

Nixon, K.C., and J. M. Carpenter. 2000. On the other "phylogenetic systematics." *Cladistics* 16:298–318.

Nixon, K. C., and J. I. Davis. 1991. Polymorphic taxa, missing values and cladistic analysis. *Cladistics* 7:233–241.

Nixon, K. C., and Q. D. Wheeler. 1992. Measures of phylogenetic diversity, 216–234. *In:* Novacek, M. J., and Q. D. Wheeler (eds.), *Extinction and Phylogeny.* Columbia University Press, New York.

Nixon, K. C., J. M. Carpenter, and D. W. Stevenson. 2003. The PhyloCode is fatally flawed, and the "Linnaean" System can be easily fixed. *Botanical Review* 69:111–120.

Ogden, T. H., and M. F. Whiting. 2003. The problem with "the Paleoptera Problem": sense and sensitivity. *Cladistics* 19:432–442.

O'Grady, R. T., and G. B. Deets. 1987. Coding multistate characters, with special reference to the use of parasites as characters of their hosts. *Systematic Zoology* 36:268–279.

O'Grady, R. T., G. B. Deets, and G. W. Benz. 1989. Additional observations on nonredundant linear coding of multistate characters. *Systematic Zoology* 38:54–57.

Oosterbroek, P., and G. Courtney. 1995. Phylogeny of the nematocerous families of Diptera (Insecta). *Zoological Journal of the Linnean Society* 115:267–311.

Owen, R. 1843. *Lecture on the Comparative Anatomy and Physiology of the Invertebrate Animals.* Longman, Brown, Green, and Longman, London.

Page, R. D. M. 1988. Quantitative cladistic biogeography: constructing and comparing area cladograms. *Systematic Zoology* 37:254–270.

Page, R. D. M. 1989. Comments on component compatibility in historical biogeography. *Cladistics* 5:167–182.

Page, R. D. M. 1990a. Component analysis: a valiant failure? *Cladistics* 6:119–136.

Page, R. D. M. 1990b. Temporal congruence and cladistic analysis of biogeography and cospeciation. *Systematic Zoology* 39:205–226.

Page, R. D. M. 1994. Parallel phylogenies: reconstructing the history of host-parasite assemblages. *Cladistics* 10:155–173.

Patterson, C. 1982. Morphological characters and homology, 21–74. *In:* Joysey, K. A., and A. E. Friday (eds.), *Problems in Phylogenetic Reconstruction.* Academic Press, London.

Patterson, C. 1987. Introduction, 1–22. *In:* Patterson, C. (ed.), *Molecules and Morphology in Evolution. Conflict or Compromise?* Cambridge University Press, Cambridge.

Patterson, C. 1988. Homology in classical and molecular biology. *Molecular Biology and Evolution* 5:603–625.

Patterson, C., and D. E. Rosen. 1977. Review of ichthyodectiform and other Mesozoic teleost fishes and the theory and practice of classifying fossils. *Bulletin of the American Museum of Natural History* 158:1–172.

Penz, C. M. 2007. Evaluating the monophyly and phylogenetic relationships of Brassolini genera (Lepidoptera, Nymphalidae). *Systematic Entomology* 32:668–689.

Pickett, K. M., and C. P. Randle. 2005. Strange Bayes indeed: uniform topological priors imply non-uniform clade priors. *Molecular Phylogenetics and Evolution* 34:203–211.

Piel, W. H., M. J. Donoghue, M. J. Sanderson, and M. Walsh. 2007. TreeBASE: a database of phylogenetic knowledge. http://www.treebase.org/treebase/index.html [accessed 20 March 2008].

Pimentel, R. A., and R. Riggins. 1987. The nature of cladistic data. *Cladistics* 3:201–209.

Platnick, N. I. 1978. Classifications, historical narratives, and hypotheses. *Systematic Zoology* 27:365–369.

Platnick, N. I. 1979. Philosophy and the transformation of cladistics. *Systematic Zoology* 28:537–546.

Platnick, N. I. 1981a. Discussion of: Croizat's panbiogeography versus phylogenetic biogeography, by L. Z. Brundin, 144–150. *In:* Nelson, G., and D. E. Rosen (eds.), *Vicariance Biogeography: A Critique.* Columbia University Press, New York.

Platnick, N. I. 1981b. Widespread taxa and biogeographic congruence, 223–227. *In:* Funk, V. A., and D. R. Brooks (eds.), *Proceedings of the First Meeting of the Willi Hennig Society.* New York Botanical Garden, Bronx, New York.

Platnick, N. I. 1982. Defining characters and evolutionary groups. *Systematic Zoology* 31:282–284.

Platnick, N. I. 1985. Philosophy and the transformation of cladistics revisited. *Cladistics* 1:87–94.

Platnick, N. I. 1991. On areas of endemism. *Australian Systematic Botany* 4:xi–xii.

Platnick, N. I. 1992. Patterns of biodiversity, 15–24. *In:* Eldredge, N. (ed.), *Systematics, Ecology, and the Biodiversity Crisis.* Columbia University Press, New York.

Platnick, N. I. 1997. *Advances in Spider Taxonomy 1992–1995.* New York Entomological Society, New York.

Platnick, N. I. 2008. *The World Spider Catalog.* Version 8.5. http://research.amnh.org/entomology/spiders/catalog/index.html [accessed 5 Jan. 2009].

Platnick, N. I., and H. D. Cameron. 1977. Cladistic methods in textual, linguistic, and phylogenetic analysis. *Systematic Zoology* 26:380–385.

Platnick, N. I., and G. Nelson. 1978. A method of analysis for historical biogeography. *Systematic Zoology* 27:1–16.

Platnick, N. I., and G. Nelson. 1984. Composite areas in vicariance biogeography. *Systematic Zoology* 33:328–335.

Platnick, N. I., J. A. Coddington, R. R. Forster, and C. E. Griswold. 1991. Spinneret morphology and the phylogeny of haplogyne spiders (Araneae, Araneomorphae). *American Museum Novitates* 3016:1–73.

Platnick, N. I., C. J. Humphries, G. Nelson, and D. M. Williams. 1996. Is Farris optimization perfect? Three-taxon statements and multiple branching. *Cladistics* 243–352.

Pleijel, F. 1995. On character coding for phylogeny reconstruction. *Cladistics* 11:309–315.

Polhemus, D. A. 1996. Island arcs, and their influence on Indo-Pacific biogeography, 51–66. *In:* Keast, A., and S. E. Miller (eds.), *The Origin and Evolution of Pacific Island Biotas, New Guinea to Eastern Polynesia: Patterns and Processes.* SPB Academic Publishing, Amsterdam.

Popper, K. 1957. *The Poverty of Historicism.* Boston: Beacon Press. 166 pp.

Popper, K. 1968. *The Logic of Scientific Discovery.* 2nd English ed. Harper and Row, New York. 480 pp.

Popper, K. 1975. The rationality of scientific revolutions, 72–101. *In:* Harre, R. (ed.), *Problems of Scientific Revolution: Progress and Obstacles to Progress in Science.* The Herbert Spencer Lectures, 1973. Clarendon Press, Oxford.

Popper, K. 1980. Evolution. *New Scientist* 87:611.

Posada, D., and K. A. Crandall. 1998. Modeltest: testing the model of DNA substitution. *Bioinformatics* 14:817–818.

Posada, D., and K. A. Crandall. 2001. Intraspecific gene genealogies: trees grafting into networks. *Trends in Ecology and Evolution* 16:37–45.

Prendini, L. 2001. Species or supraspecific taxa as terminals in cladistic analysis? Groundplans versus exemplars revisited. *Systematic Biology* 50:290–300.

Prendini, L. 2005. Comments on "Identifying spiders through DNA barcodes." *Canadian Journal of Zoology* 83:498–504.

Pulawski, W. J. 2008. *Catalog of Sphecidae sensu lato.* http://research.calacademy.org/research/entomology/Entomology_Resources/Hymenoptera/sphecidae/Genera_and_species_PDF/introduction.htm [accessed 5 Jan. 2009].

Raven, P. H., G. B. Johnson, J. B. Losos, K. A. Mason, and S. R. Singer. 2008. *Biology* 8th ed. McGraw Hill, Boston.

Remane, A. 1952. *Die Grundlagen des Naturlichen Systems der Vergleichenden Anatomie und der Phylogenetik.* Geest und Portig K. G., Leipzig.

Rieppel, O. 1988. *Fundamentals of Comparative Biology.* Birkhäuser, Basel. 202 pp.

Rieppel, O. 2003. Popper and systematics. *Systematic Biology* 52:259–270.

Rieppel, O. 2005a. A skeptical look at justification. *Cladistics* 21:203–207.

Rieppel, O. 2005b. The philosophy of total evidence and its relevance for phylogenetic inference. *Papeis Avulsos de Zoologia* 45:77–89.

Rieppel, O. 2006a. On concept formation in systematics. *Cladistics* 22:474–492.

Rieppel, O. 2006b. The PhyloCode: a critical discussion of its theoretical foundation. *Cladistics* 22:186–197.

Rieppel, O. 2007a. The metaphysics of Hennig's phylogenetic systematics: substance, events, and laws of nature. *Systematics and Biodiversity* 5:345–360.

Rieppel, O. 2007b. Parsimony, likelihood, and instrumentalism in systematics. *Biology and Philosophy* 22:141–144.

Rieppel, O. 2007c. The performance of morphological characters in broad-scale phylogenetic analyses. *Biological Journal of the Linnean Society* 92:297–308.

Rieppel, O., and M. Kearney. 2002. Similarity. *Biological Journal of the Linnean Society* 75:59–82.

Rieppel, O., and M. Kearney. 2007. The poverty of taxonomic characters. *Biology and Philosophy* 22:95–113.

Rieppel, O., M. Rieppel, and L. Rieppel. 2006. Logic in systematics. *Journal of Zoological Systematics and Evolutionary Research* 44:186–192.

Ripplinger, J., and J. Sullivan. 2008. Does choice in model selection affect maximum likelihood analysis? *Systematic Biology* 57:76–85.

Rohlf, F. J. 1963. Congruence of larval and adult classifications in *Aedes* (Diptera: Culicidae). *Systematic Zoology* 12:97–117.

Rokas, A., B. L. Williams, N. King, and S. B. Carroll. 2003. Genome-scale approaches to resolving incongruence in molecular phylogenies. *Nature* 425:798–803.

Romer, A. S. 1962. Bibliography of Fossil Vertebrates Exclusive of North America. Memoirs of the Geological Society of America 87:1509–1927 (2 vols.).

Ronquist, F. 1996. DIVA. Version 1.0. Computer program for MacOS and Win32. http://www.ebc.uu.se/systzoo/research/diva/diva.html [accessed 5 Jan. 2009].

Ronquist, F. 1997. Dispersal—vicariance analysis: a new biogeographic approach to the quantification of historical biogeography. *Systematic Biology* 46:195–203.

Ronquist, F. 2003a. Parsimony analysis of coevolving species associations, 22–64. *In:* Page, R. D. M. (ed.), *Tangled Trees: Phylogeny, Cospeciation, and Coevolution.* University of Chicago Press, Chicago.

Ronquist, F. 2003b. TreeFitter v. 1.2. http://www.ebc.uu.se/systzoo/research/treefitter/treefitter.html [accessed 5 Jan. 2009].

Rosen, D. E. 1975. A vicariance model of Caribbean biogeography. *Systematic Zoology* 24:431–464.

Rosen, D. E. 1978. Vicariant patterns and historical explanation in biogeography. *Systematic Zoology* 27:159–188.

Rosen, D. E. 1982. Do current theories of evolution satisfy the basic requirements of explanation? *Systematic Zoology* 31:76–85.

Ross, H. H. 1974. *Biological Systematics.* Addison-Wesley, Reading, Massachusetts. 345 pp.

Rowe, T. 1987. Definition and diagnosis in the phylogenetic system. *Systematic Zoology* 36:208–211.

Saitou, N., and M. Nei. 1987. The neighbor-joining method: a new method for reconstructing phylogenetic trees. *Molecular Biology and Evolution* 4:406–425.

Sanderson, M. J., A. Purvis, and C. Henze. 1998. Phylogenetic supertrees: Assembling the tree of life. *Trends in Ecology and Evolution* 13:105–109.

Sankoff, D., and R. Cedergren. 1983. Simultaneous comparison of three or more sequences related by a tree, 253–264. *In:* Sankoff, D., and J. Kruskall (eds.), *Time Warps, String Edits, and Macromolecules: The Theory and Practice of Sequence Comparison.* Addison-Wesley, Reading, Massachusetts.

Sankoff, D., and P. Rousseau. 1975. Locating the vertices of a Steiner tree in an arbitrary space. *Mathematical Programming* 9:240–246.

Sanmartin, I. 2007. Event-based biogeography: integrating patterns, processes, and time, 135–159. *In:* Ebach, M. C., and R. S. Tangney (eds.), *Biogeography in a Changing World.* CRC Press, Boca Raton, Florida.

Sanmartin, I., and F. Ronquist. 2004. Southern Hemisphere biogeography inferred from event-based models: plant versus animal patterns. *Systematic Biology* 53:216–243.

Sarich, V. M., C. W. Schmid, and J. Marks. 1989. DNA hybridization as a guide to phylogenies: a critical analysis. *Cladistics* 5:3–32.

Schoch, R. M. 1986. *Phylogeny Reconstruction in Paleontology.* Van Nostrand Reinhold, New York.

Schuh, R. T. 1991. Phylogenetic, host, and biogeographic analyses of the Pilophorini (Heteroptera: Miridae: Phylinae). *Cladistics* 7:157–189.

Schuh, R. T. 2003. The Linnaean System and its 250-year persistence. *Botanical Review* 69:59–78.

Schuh, R. T. 2006. Revision, phylogenetic, biogeographic, and host analyses of the endemic Western North American *Phymatopsallus* group, with the description of 9 new genera and 15 new species (Insecta: Hemiptera: Miridae: Phylinae). *Bulletin of the American Museum of Natural History* 301:1–115.

Schuh, R. T. 2008. *On-line Systematic Catalog of Plant Bugs (Insecta: Heteroptera: Miridae).* http://research.amnh.org/pbi/catalog/.

Schuh, R. T., and G. Cassis. 2004–2008. Plant Bug Planetary Biodiversity Inventory Specimen Database. http://research.amnh.org/pbi/locality/.

Schuh, R. T., and J. S. Farris. 1981. Methods for investigating taxonomic congruence and their application to the Leptopodomorpha. *Systematic Zoology* 30:331–351.

Schuh, R. T., and J. T. Polhemus. 1980. Analysis of taxonomic congruence among morphological, ecological, and biogeographic data sets for the Leptopodomorpha (Hemiptera). *Systematic Zoology* 29:1–26.

Schuh, R. T., and G. M. Stonedahl. 1986. Historical biogeography in the Indo-Pacific: a cladistic approach. *Cladistics* 2:337–355.

Schuh, R. T., C. Weirauch, and W. C. Wheeler. 2009. Phylogenetic relationships within the Cimicomorpha (Hemiptera: Heteroptera): a total evidence analysis. *Systematic Entomology* 34:15–48.

Schulmeister, S., W. C. Wheeler, and J. M. Carpenter. 2002. Simultaneous analysis of the basal lineages of Hymenoptera (Insecta) using sensitivity analysis. *Cladistics* 18:455–484.

Sclater, P. L. 1858. On the general geographical distribution of the members of the class Aves. *Journal of the Linnean Society, Zoology* 2:130–145.

Sharkey, M. J. 1989. A hypothesis-independent method of character weighting for cladistic analysis. *Cladistics* 5:63–86.

Sherborne, C. D. 1902–1932. *Index Animalium.* 9 vols. British Museum (Natural History), London. http://www.sil.si.edu/digitalcollections/indexanimalium/ [accessed 26 Aug. 2008].

Sibley, C. G., and J. E. Ahlquist. 1990. *Phylogeny and Classification of Birds: A Study in Molecular Evolution.* Yale University Press, New Haven, Connecticut.

Sibley, C. G., and B. L. Monroe, Jr. 1990. *Distribution and Taxonomy of Birds of the World.* Yale University Press, New Haven, Connecticut.

Siddall, M. E. 1995. Another monophyly index: revisiting the jackknife. *Cladistics* 11:33–56.

Siddall, M. E. 1998. Success of parsimony in the four-taxon case: long branch repulsion by likelihood in the Farris Zone. *Cladistics* 14:209–220.

Siddall, M. E., and A. G. Kluge. 1997. Probabilism and phylogenetic inference. *Cladistics* 13:313–336.

Siddall, M. E., and M. F. Whiting. 1999. Long-branch abstractions. *Cladistics* 15:9–24.

Simmons, M. P., K. M. Pickett, and M. Miya. 2004. How meaningful are Bayesian support values? *Molecular Biology and Evolution* 21:188–199.

Simonsen, T. J. 2006. Fritillary phylogeny, classification, and larval host plants: reconstructed mainly on the basis of male and female genitalic morphology (Lepidoptera: Nymphalidae: Argynnini). *Biological Journal of the Linnean Society* 89:627–673.

Simpson, G. G. 1961. *Principles of Animal Taxonomy.* Columbia University Press, New York. 247 pp.

Slater, J. A. 1964. *A Catalogue of the Lygaeidae of the World.* 2 vols. University of Connecticut, Storrs.

Slater, J. A., and D. B. Wilcox. 1973. The chinch bugs or Blissinae of South Africa (Hemiptera: Lygaeidae). *Memoirs of the Entomol.ogical Society of Southern Africa* 12:135 pp.

Slowinski, J. B. 1998. The number of multiple alignments. *Molecular Phylogenetics and Evolution* 10:264–266.

Smith, V. S., R. D. M. Page, and K. P. Johnson. 2004. Data incongruence and the problem of avian louse phylogeny. *Zoologica Scripta* 33:239–259.

Sober, E. R. 1983. Parsimony methods in systematics, 37–47. *In:* Platnick, N. I., and V. A. Funk (eds.), *Advances in Cladistics.* Vol. 2., *Proceedings of the Second Meeting of the Willi Hennig Society.* Columbia University Press, New York.

Sober, E. R. 1988. *Reconstructing the Past: Parsimony, Evolution, and Inference.* MIT Press, Cambridge, Massachusetts. 265 pp.

Sober, E. R. 1993. Experimental tests of phylogenetic inference methods. *Systematic Biology* 42:85–89.

Sokal, R. R., and F. J. Rohlf. 1981. Taxonomic congruence in the Leptopodomorpha reexamined. *Systematic Zoology* 30:309–325.

Sokal, R. R., and P. H. A. Sneath. 1963. *Principles of Numerical Taxonomy.* W. H. Freeman and Co., San Francisco. 359 pp.

Soltis, D. E., P. S. Soltis, M. E. Mort, M. W. Chase, V. Savolainen, S. B. Hoot, and C. M. Morton. 1998. Inferring complex phylogenies using parsimony: an empirical approach using three large DNA data sets for angiosperms. *Systematic Biology* 47:32–42.

Soltis, D. E., P. S. Soltis, P. K. Endress, and M. W. Chase. 2005. *Phylogeny and Evolution of the Angiosperms.* Sinauer Associates, Sunderland, Massachusetts.

Sorensen, J. T., B. C. Campbell, R. J. Gill, and J. D. Steffan-Campbell. 1995. Non-monophyly of Auchenorrhyncha (Homoptera), based upon 18S rDNA phylogeny: eco-evolutionary and cladistic implications within pre-Heteropterodea Hemiptera (s. l.) and a proposal for new monophyletic suborders. *Pan-Pacific Entomologist* 71:31–60.

Sperling, F. A. H. 2004. DNA barcoding: Deus ex machina. *Newsletter of the Biological Survey of Canada (Terrestrial Arthropods)* 22:50–53.

Sperling, F. A. H., G. S. Anderson, and D. A. Hickey. 1994. A DNA-based approach to the identification of insect species used for postmortem interval estimation. *Journal of Forensic Sciences* 39:418–427.

Stamatakis, A. 2006. RAxML-VI-HPC: Maximum likelihood-based phylogenetic analyses with thousands of taxa and mixed models. *Bioinformatics* 22:2688–2690.

Stamos, D. N. 1996. Popper, falsifiability, and evolutionary biology. *Biology and Philosophy* 11:161–191.

Standley, P. C. 1922. *Trees and Shrubs of Mexico.* Contribution of the United States Herbarium, vol. 23. Smithsonian Institution, Washington, DC.

Steel, M. 1994. The maximum likelihood point for a phylogenetic tree is not unique. *Systematic Biology* 43:560–564.

Steel, M. 2002. Some statistical aspects of the maximum parsimony method, 125–139. *In:* DeSalle, R., G. Giribet, and W. C. Wheeler (eds.), *Molecular Systematics and Evolution: Theory and Practice.* Birkhäuser Verlag, Basel.

Stonedahl, G. M. 1988. Revisions of *Dioclerus, Harpedona, Mertila, Myiocapsus, Prodromus,* and *Thaumastomiris* (Heteroptera: Miridae, Bryocorinae: Eccritotarsini). *Bulletin of the American Museum Natural History* 187:1–99.

Stonedahl, G. M. 1990. Revision and cladistic analysis of the Holarctic genus *Atractotomus* Fieber (Heteroptera: Miridae: Phylinae). *Bulletin of the American Museum Natural History* 198:1–88 pp.

Strickland, H. E. 1837. On the inexpediency of altering established terms in natural history. *Magazine of Natural History,* ser. 2, vol. 1:127–131.

Strickland, H. E. 1841. On the true method of discovering the natural system in zoology and botany. *Annals and Magazine of Natural History,* 1st ser., 6:184–194.

Strickland, H. E. 1842. Rules for zoological nomenclature. Report of the 12th meeting of the British Association held at Manchester in 1842. *Reports of the British Association for the Advancement of Science* 1842:105–121.

Suzuki, Y., G. V. Glazko, and M. Nei. 2002. Overcredibility of molecular phylogenies obtained by Bayesian phylogenetics. *Proceedings of the National Academy of Sciences USA* 99:16138–16143.

Swofford, D. L. 1991. When are phylogeny estimates from molecular and morphological data incongruent, 295–333. *In:* Miyamoto, M. M., and J. Cracraft (eds.), *Phylogenetic Analysis of DNA Sequences.* Oxford University Press, Oxford.

Swofford, D. L. 2000. *PAUP* Phylogenetic Analysis Using Parsimony (*and other methods).* Sinauer Associates, Sunderland, Massachusetts.

Swofford, D. L., and W. P. Maddison. 1987. Reconstructing ancestral character states under Wagner parsimony. *Mathematical Bioscience* 87:199–229.

Swofford, D. L., and W. P. Maddison. 1992. Parsimony, character-state reconstructions, and evolutionary inferences. 186–223. *In:* Mayden, R. L. (ed.), *Systematics, Historical Ecology, and North American Freshwater Fishes.* Stanford University Press, Stanford, California.

Swofford, D. L., and G. J. Olsen. 1990. Phylogeny reconstruction, 411–501. *In:* Hillis, D. M., and C. Moritz (eds.), *Molecular Systematics.* 1st ed. Sinauer Associates, Sunderland, Massachusetts.

Swofford, D. L., G. J. Olsen, P. J. Waddell, and D. M. Hillis. 1996. Phylogenetic Inference, 407–514. *In:* Hillis, D. M., C. Moritz, and B. K. Mable (eds.), *Molecular Systematics.* 2nd ed. Sinauer Associates, Sunderland, Massachusetts.

Szumik, C., F. Cuezzo, P. Goloboff, and A. Chalup. 2002. An optimality criterion to determine areas of endemism. *Systematic Biology* 51:806–816.

Szumik, C., and P. Goloboff. 2004. Areas of endemism: an improved optimality criterion. *Systematic Biology* 53:968–977.

Tajima, F. 1983. Evolutionary relationships of DNA sequences in finite populations. *Genetics* 105:437–460.

Tchernov, E., O. Rieppel, H. Zaher, M. J. Polcyn, and L. L. Jacobs. 2000. A fossil snake with limbs. *Science* 287:2010–2012.

Templeton, A. R. 2004. Statistical phylogeography: methods of evaluating and minimizing inference errors. *Molecular Ecology* 13:789–809.

Thiele, K. 1993. The Holy Grail of the perfect character: the cladistic treatment of morphometric data. *Cladistics* 9:275–304.

Thomson Reuters. 2007. ISI Web of Knowledge http://portal.isiknowledge.com/portal.cgi [accessed 20 Jan. 2007].

Thorpe, R. S. 1984. Coding morphometric characters for constructing Distance Wagner networks. *Evolution* 38:244–255.

Tree of Life. http://www.tolweb.org/ [accessed 15 Sept. 2008].

Trueman, J. W. H., B. E. Pfeil., S. A. Kelchner, and D. K. Yeates. 2004. Did stick insects *really* regain their wings? *Systematic Entomology* 29:138–139.

Tuffley, C., and Steel M. 1997. Links between maximum likelihood and maximum parsimony under a simple model of site substitution. *Bulletin of Mathematical Biology* 59:581–607.

Turner, J. R. G. 1967. Goddess changes sex, or the gender game. *Systematic Zoology* 16:349–350.

Tuxen, S. L. (ed.). 1970. *Taxonomist's Glossary of Genitalia of Insects.* 2nd ed. S-H Service Agency, Darien, Connecticut.

Vane-Wright, R. I., C. J. Humphries, and P. H. Williams. 1991. What to protect?—systematics and the agony of choice. *Biological Conservation* 55:235–254.

Varón, A., L. S. Vinh, I. Bomash, and W. C. Wheeler. 2007. POY 4.0 Beta 1908. American Museum of Natural History. http://research.amnh.org/scicomp/projects/poy.php.

Viloria, A. L. 2003. Historical biogeography and the origins of the satyrine butterflies of the Tropical Andes (Insecta: Lepidoptera, Rhopalocera), 247–261. *In:* Morrone, J. J., and J. Llorente-Bousquets (eds.), *Una perspectiva latinoamericana de la biogeografía.* México, D. F.: Las Prensas de Ciencias, Facultad de Ciencias, UNAM.

Vogt, L. 2007. A falsificationist perspective on the usage of process frequencies in phylogenetics. *Zoologica Scripta* 36:395–407.

Von Baer, K. 1828. *Über Entwickelungsgeschichte der Thiere: Beobachtung und Reflexion.* Bornträger, Königsberg.

Vrana, P., and W. C.Wheeler. 1992. Individual organisms as terminal entities: laying the species problem to rest. *Cladistics* 8:67–72.

Wahlberg, N., M. F. Braby, A.V. Z. Brower, R. de Jong, M.-M. Lee, S. Nylin, N. E. Pierce, F. A. H. Sperling, R. Vila, A. D. Warren, and E. Zakharov. 2005. Synergistic effects of combining morphological and molecular data in resolving the phylogeny of butterflies and skippers. *Proceedings of the Royal Society of London B* 272:1577–1586.

Wallace, A. R. 1860. On the zoological geography of the Malay Archipelago. *Journal of the Linnean Society* 4:172–184.

Wallace, A. R. 1876. *The Geographical Distribution of Animals.* McMillan, London.

Wanntorp, H.-E. 1983. Historical constraints in adaptation theory: traits and non-traits. *Oikos* 41:157–160.

Watrous, L. E., and Q. D. Wheeler. 1981. The out-group comparison method of character analysis. *Systematic Zoology* 30:1–11.

Wegener, A. 1966. *The Origin of Continents and Oceans.* Dover, New York. [English translation of the fourth edition, 1929].

Weingartner, E., N. Walhberg, and S. Nylin. 2006. Dynamics of host plant use and species diversity in *Polygonia* butterflies (Nymphalidae). *Journal of Evolutionary Biology* 19:483–491.

Wenzel, J. W. 1992. Behavioral homology and phylogeny. *Annual Review of Ecology and Systematics* 23:361–381.

Wenzel, J. W. 1993. Application of the biogenetic law to behavioral ontogeny: a test using nest architecture in paper wasps. *Journal of Evolutionary Biology* 6:229–247.

Wenzel, J. W. 1997. When is a phylogenetic test good enough? 31–54. *In:* Grandcolas, P. (ed.), *The Origin of Biodiversity in Insects: Phylogenetic Tests of Evolutionary Scenarios.* Memoires du Museum National D'histoire Naturelle, Paris, vol. 173.

Wenzel, J. W., and J. M. Carpenter. 1994. Comparing methods: adaptive traits and tests of adaptation, 79–101. *In:* Eggleton, P., and R. I. Vane-Wright (eds.), *Phylogenetics and Ecology.* Academic Press, London.

Weston, P. H. 1988. Indirect and direct methods in systematics, 25–56. *In:* Humphries, C. J. (ed.), *Ontogeny and Systematics.* British Museum (Natural History), London.

Weston, P. H., and M. D. Crisp. 1994. Cladistic biogeography of waratahs (Proteaceae: Embothrieae) and their allies across the Pacific. *Australian Systematic Botany* 7: 225–249.

Wheeler, Q. D. 1990. Ontogeny and character phylogeny. *Cladistics* 6:225–268.

Wheeler, Q. D. 1995. The "Old Systematics": classification and phylogeny, 31–62. *In:* Pakaluk, J., and S. A. Slipinski (eds.), *Biology, Phylogeny, and Classification of Coleoptera: Papers Celebrating the 80th Birthday of Roy A. Crowson.* Muzeum i Instytut Zoologii PAN, Warszawa.

Wheeler, Q. D. 2005. Losing the plot: DNA "barcodes" and taxonomy. *Cladistics* 21: 405–407.

Wheeler, Q. D., and R. Meier (eds.). 2000. *Species Concepts and Phylogenetic Theory.* Columbia University Press, New York. 230 pp.

Wheeler, W. C. 1990. Nucleic acid sequence phylogeny and random outgroups. *Cladistics* 6:363–367.

Wheeler, W. C. 1993. The triangle inequality and character analysis. *Molecular Biology and Evolution* 10:707–712.

Wheeler, W. C. 1994. Sources of ambiguity in nucleic acid sequence alignment, 323–354. *In:* Schierwater, B., B. Streit, G. P. Wagner, and R. DeSalle (eds.), *Molecular Ecology and Evolution: Approaches and Applications.* Birkhäuser Verlag, Basel.

Wheeler, W. C. 1995. Sequence alignment, parameter sensitivity, and the phylogenetic analysis of molecular data. *Systematic Biology* 44:321–331.

Wheeler, W. C. 1996. Optimization alignment: the end of multiple sequence alignment in phylogenetics? *Cladistics* 12:1–9.

Wheeler, W. C., and D. G. Gladstein. 1992. MALIGN: A Multiple Sequence Alignment Program. Program and documentation. Version. 2.0. The American Museum of Natural History, New York.

Wheeler, W. C., P. Cartwright, and C. Y. Hayashi. 1993. Arthropod phylogeny: a combined approach. *Cladistics* 9:1–39.

Wheeler, W. C., D. G. Gladstein, and J. De Laet. 1996–2003. POY. Version 3.0 ftp.amnh.org/pub/molecular/poy.

Wheeler, W. C., L. Aagesen, C. P. Arango, J. Faivovich, T. Grant, C. D'Haese, D. Janies, W. L. Smith, A. Varon, and G. Giribet. 2006a. *Dynamic Homology and Phylogenetic Systematics: a Unified Approach Using POY.* American Museum of Natural History, New York.

Wheeler, W. C., M. J. Ramirez, L. Aagesen, and S. Schulmeister. 2006b. Partition-free congruence analysis: implications for sensitivity analysis. *Cladistics* 22:256–263.

Whiting, M. F. 1998. Long-branch distraction and the Strepsiptera. *Systematic Biology* 47:134–138.

Whiting, M. F., S. Bradler, and T. Maxwell. 2003. Loss and recovery of wings in stick insects. *Nature* 421:264–267.

Whiting, M. F., J. C. Carpenter, Q. D. Wheeler, and W. C. Wheeler. 1997. The Strepsiptera problem: phylogeny of the holometabolous insect orders inferred from 18s and 28s ribosomal DNA sequences and morphology. *Systematic Biology* 46:1–68.

Whiting, M. F., and W. C. Wheeler. 1994. Insect homeotic transformation. *Nature* 368:696.

Whiting, M. F., and A. S. Whiting. 2004. Is wing recurrence *really* impossible?: a reply to Trueman et al. *Systematic Entomology* 29:140–141.

Wielgorskaya, T. 1995. *Dictionary of the Generic Names of Seed Plants.* Consulting editor Armen Takhtajan. Columbia University Press, New York.

Wiens, J. J. 2003. Missing data, incomplete taxa, and phylogenetic accuracy. *Systematic Biology* 52:528–538.

Wiley, E. O. 1979. An annotated Linnaean hierarchy, with comments on natural taxa and competing systems. *Systematic Zoology* 28:308–337.

Wiley, E. O. 1988. Parsimony analysis and vicariance biogeography. *Systematic Zoology* 37:271–290.

Wilkinson, M. 1995a. Coping with abundant missing entries in phylogenetic inference using parsimony. *Systematic Biology* 44:501–514.

Wilkinson, M. 1995b. A comparison of methods of character construction. *Cladistics* 11:297–308.

Wilkinson, M., J. A. Cotton, C. Creevey, O. Eulenstein, S. R. Harris, F.-J. Lapointe, C. Levasseur, J. O. McInerney, D. Pisani, and J. L. Thorley. 2005. The shape of supertrees to come: tree shape-related properties of fourteen supertree methods. *Systematic Biology* 54:419–431.

Will, K. W., B. D. Mishler, and Q. D. Wheeler. 2005. The perils of DNA barcoding and the need for integrative taxonomy. *Systematic Biology* 54:844–851.

Will, K. W., and D. Rubinoff. 2004. Myth of the molecule: DNA barcodes for species cannot replace morphology for identification and classification. *Cladistics* 20:47–55.

Williams, D. M., and M. C. Ebach. 2008. *Foundations of Systematics and Biogeography.* Springer, New York.

Williams, D. M., and D. J. Siebert. 2000. Characters, homology and three-item analysis, 183–208. *In:* Scotland, R. W., and R. T. Pennington (eds.), *Homology and Systematics: Coding Characters for Phylogenetic Analysis.* Taylor and Francis, London.

Williams, P. H., C. J. Humphries, and K. J. Gaston. 1994. Centres of seed-plant diversity: the family way. *Proceedings of the Royal Society of London B* 256:67–70.

Willis, J. C. 1973. *A Dictionary of the Flowering Plants and Ferns.* 8th ed. Revised by H. K. Airy Shaw. Cambridge University Press, Cambridge.

Wilson, D. E., and D. M. Reeder (eds.). 1993. *Mammal species of the World: A Taxonomic and Geographic Reference.* 2nd ed. Smithsonian Institution Press, Washington, DC.

Wilson, R. A. (ed). 1999. *Species.* MIT Press, Cambridge, Massachusetts. 325 pp.

Wimberger, P. H, and A. de Queiroz. 1996. Comparing behavioral and morphological characters as indicators of phylogeny, 206–233. *In:* E. P. Martins (ed.), *Phylogenies and the Comparative Method in Animal Behavior.* Oxford University Press, Oxford.

Winkworth, R. C., S. J. Wagstaff, D. Glenny, and P. J. Lockhart. 2002. Plant dispersal N.E.W.S from New Zealand. *Trends in Ecology and Evolution* 17:514–520.

Winsor, M. P. 2003. Non-essentialist methods in pre-Darwinian taxonomy. *Biology and Philosophy* 18:387–400.

Winsor, M. P. 2006. The creation of the essentialism story: an exercise in metahistory. *History and Philosophy of the Life Sciences* 28:149–174.

Wood, D. M., and A. Borkent. 1989. Phylogeny and classification of the Nematocera, 1333–1370. *In: Manual of Nearctic Diptera,* vol. 3. Research Branch, Agriculture Canada, Ottawa.

Wygodzinsky, P., and S. Lodhi. 1989. Atlas of antennal trichobothria in the Pachynomidae and Reduviidae (Heteroptera). *Journal of the New York Entomological Society* 97:371–393.

Yang, Z. 2006. *Computational Molecular Evolution.* Oxford University Press, Oxford.

Yeates, D. K. 1995. Groundplans and exemplars: paths to the tree of life. *Cladistics* 11: 343–357.

Zandee, M., and M. C. Roos. 1987. Component-compatibility in historical biogeography. *Cladistics* 3:305–332.

Zelditch, M. L., W. L. Fink, and D. L. Swiderski. 1995. Morphometrics, homology, and phylogenetics: quantified characters as synapomorphies. *Systematic Biology* 44:179–189.

Zhou, B. B., M. Tarawneh, P. Wang, D. Chu, C. Wang, A.Y. Zomaya, and R. P. Brent. 2006. Evidence of multiple maximum likelihood points for a phylogenetic tree, 193–200. *In: Proceedings of the Sixth IEEE Symposium on Bioinformatics and BioEngineering.*

Zimmerman, E. C. 1991–1994. *Australian weevils (Coleoptera: Curculionidae).* Vols. 1–6. CSIRO Publications and Australian Entomological Society, Melbourne.

Zimmermann, W. 1943. Die Methoden der Phylogenetik, 20–56. *In:* Heberer, G. (ed.), *Die Evolution der Organismen.* Jena.

Zoological Record. Thompson Scientific. http://portal.isiknowledge.com/portal.cgi?DestApp=ZOOREC&Func=Frame [accessed 22 Jan. 2007].

Zrzavý, J. 1997. Phylogenetics and ecology: all characters should be included in the cladistic analysis. *Oikos* 80:186–192.

AUTHOR INDEX

Aanen, D. K., 229
Acocks, J. P. H., 248
Adams, E. N., 152
Agnarsson, I., 111, 238
Alfaro, M. E., 137, 144
Altshul, S. F., 76
Amundson, R., 45
Andersen, N. M., 233, 235
Anderson, F. E., 140, 143
Appel, T. A., 37, 52, 125
Archie, J. W., 81, 148, 169
Ashlock, P. D., 97, 190, 213
Avise, J. C., 232
Ax, P., 195
Axelius, B., 218, 219

Baker, R. H., 158, 161, 165
Barbadilla, A., 80
Barkley, T. M., 200
Barrett, M., 164
Barry, M., 101
Baum, B. R., 164
Beatty, J., 46
Belon, P., 54, 62
Beltrán, M., 78
Bergsten, J., 140, 143
Bertrand, Y., 251
Bininda-Emonds, O., 164
Blackwelder, R. E., 181, 208
Bock, W., 6, 40
Bogdanowicz, S. M., 245
Borror, D. J., 208
Boudreaux, H. B., 57
Boyden, A., 53
Boyer, S. L., 226
Brady, R. H., 44, 47, 48, 52, 53, 110, 143, 149
Bremer, K., 13, 153, 154, 165
Brooks, D. R., 73, 74, 220, 227, 242
Brower, A. V. Z., 18, 40, 44, 45, 46, 47, 57, 70, 84, 91, 92, 94, 107, 149, 151, 154, 160, 161, 162, 163, 164, 165, 170, 229, 233, 245
Brower, L. P., 54
Brown, R. W., 208
Brundin, L. Z., 13, 100, 211, 214, 215, 223, 226, 248
Bull J. J., 70, 157, 158, 160

Cain, A. J., 9
Camin, J. H., 65, 110
Cantino, P. D., 200
Carmean, D., 141
Carpenter, J. M., 72, 99, 104, 116, 127, 152, 154, 156, 157, 168, 169, 170, 200, 218, 222, 234, 238, 239, 241
Carroll, L., 257
Cassis, G., 204, 244
China, W. E., 93
Chippindale, P. T., 161
Chor, B., 138
Claridge, M. F., 22
Coddington, J. A., 231, 241
Cook, L., 226
Corrick, M. G., 248
Coyne, J. A., 22
Cracraft, J., 23
Cranston, P., 169
Craw, R. C., 213, 224
Crisci, J. V., 229
Crisp, M. D., 213, 214, 226, 231, 234, 237
Croizat, L., 212, 213
Crother, B. I., 41
Crowson, R. L., 19, 30, 208
CSIRO, 244

Darlington, P. J., 211, 247
Darwin, C., 90
Davis, J. I., 44, 73, 83, 163, 165, 168
Day, W. H. E., 119
de Jong, R., 57
de Laet, J., 135
de Pinna, M., 91, 92, 108, 163, 238
de Queiroz, A., 158, 160

de Queiroz, K., 41, 45, 199, 200, 234
Deets. G. B., 67
Deleporte, P., 241
DeSalle, R., 41, 70, 151, 154, 161, 165, 170
Dingus, L., 32
Dominguez, E., 200
Donoghue, M. J., 46, 73
Donoghue, P. C. J., 196
Doyle, J. A., 73, 162
Doyle, J. J., 162
Dyar, H. G., 158

Ebach, M. C., 134, 229, 245
Edwards, A. W. F., 110
Eggleton, P., 242
Eldredge, N., 30, 52
Elias, M., 245
Endler, J. A., 210
Engelmann, G. F., 41, 106
Enghoff, H., 249
Ereshefsky, M., 22, 44
Erwin, T. L., 250
Eschmeyer, W. N., 25
Estabrook, G. F., 150
Evenhuis, N. L., 203

Faith, D. P., 41, 169
Faivovich, J., 132
Farrell, B., 227
Farris, J. S., 10, 36, 40, 41, 42, 43, 65, 67, 80, 81, 84, 90, 95, 96, 99, 110, 111, 115, 116, 117, 119, 127, 128, 131, 135, 138, 139, 144, 146, 148, 150, 154, 155, 157, 158, 160, 161, 168, 169, 189, 191, 193, 194, 195, 208, 238
Felsenstein, J., 42, 43, 58, 120, 122, 135, 139, 140, 142, 161, 168
Fichman, M., 210
Fieber, F. X., 93, 179
Fitch, W. M., 55, 61, 94, 111, 157, 160, 161, 162
Fitzhugh, K., 41
Forey, P. L., 252
Foulds L., 106
Franz, N. M., 41
Freeman, S., 51, 53
Friç, Z, N., 180
Futuyma, D. J., 22, 232

Gaffney, E. S., 32, 41, 48, 190
Gaston, K. J., 252
Gatesy, J., 42, 158, 161, 164, 165, 247
Geoffroy St. Hilaire, E., 52, 54
Ghiselin, M. T., 45, 199
Gilmour, J. S. L., 7, 188
Giribet, G., 170
Gladstein, D. G., 77, 123
Goldman, N., 76, 136
Goloboff, P. A., 82, 111, 120, 122, 123, 126, 128, 129, 130, 136, 144, 145, 157, 164, 170, 218
Goodman, M., 162
Gould, S. J., 52, 74, 80, 232, 240
Grandcolas, P., 242
Grant, T., 41, 170
Gray, H., 54
Guindon, S., 136
Guttmann, W., 125

Hackett, S. J., 247
Haeckel, E., 97, 101
Haffer, J., 23
Hafner, M. S., 228
Harold, A. S., 218
Harvey, P. H., 231, 242
Hay, O. P., 28
Hebert, P. D. N., 244
Hedges S. B., 74, 232
Helfenbein, K. G., 41
Hennig, W., 8, 27, 36, 38, 57, 92, 101, 105, 150, 163, 191, 192, 195, 226, 227
Henry, T. J., 244
Hey, J., 22
Higgins, D. G., 76
Hillis, D. M., 76
Hodkinson, T. R., 252
Holder, M., 138
Holmgren, P., 29
Howard, D. J., 22
Huelsenbeck, J. J., 137, 138, 142, 143, 144
Hugot, J.-P., 229
Hull, D. L., 7, 38, 44, 45, 199
Humphries, C. J., 84, 215, 218, 221, 222, 229

Jefferies, R. P. S., 195
Jobb, G., 136
Johnson, K., 229
Johnson, N. F., 203
Judd, D. D., 161
Judd, W. S., 13

Källersjö, M., 43, 148, 150, 157
Kearney, M., 37, 56, 72
Keller, R. A., 200
Kitching, I. J., 134
Kluge, A. G., 41, 46, 54, 73, 74, 103, 111, 119, 137, 146, 150, 157, 158, 160, 170, 177, 241
Knapp, S., 208
Kolaczkowski, B., 137
Kristensen, N. P., 57

Laamanen, T. R., 170
Lakatos, I., 39
Lamas, G., 244
Lankester, E., 91, 92, 93
Lanyon, S. M., 154, 167
Lawrence, G. H. M., 16
Le Quesne, W. J., 126, 150
Lee, M. S. Y., 165

Lewis, P. O., 137, 138
Lewontin, R. C., 240, 242
Lin, Y.-H., 247
Linnaeus, C., 173, 185, 186, 187
Lipscomb, D. L., 59, 61, 62, 84, 91, 92, 114, 148
Loconte, H., 16
Lomolino, M. V., 229
Löytynoja, A., 76
Lundberg, J. G., 99
Lynch, M., 95

Mabberley, D. J., 25
Maddison, D. R., 28, 130
Maddison, W. P., 99, 108, 111, 162, 238
Magee, B., 48
Margush, T., 154
Martins, E. P., 231
Maslin, T. P., 61
May, R., 223, 250
Mayden, R. L., 223
Mayr, E., 5, 6, 7, 14, 19, 40, 45, 52, 92, 190
McGlone, M., 226
McKenna, M. C., 30, 187, 196, 247
Meier, R., 22, 60, 64, 245
Meyer, C. P., 245
Michener, C. D., 56, 158, 199
Mickevich, M. F., 59, 61, 62, 73, 80, 84, 148, 155, 158, 162, 169
Mill, J. S., 7, 188
Miller, J. S., 111, 161, 230, 232, 233, 242
Milne-Edwards, H., 117
Mindell, D. P., 76, 94
Mitchell, P. C., 8
Mitter, C., 80, 227, 232
Mittermeier, R. A., 249, 252
Miyamoto, M. J., 154, 157, 160, 161, 162
Morrone, J. J., 218, 222, 229
Mueller, U. G., 229
Myers, N., 249, 252

Neave, S. A., 201
Nelson, G. J., 8, 30, 45, 95, 99, 101, 133, 134, 151, 154, 193, 194, 195, 209, 214, 215, 216, 218, 220, 222, 223, 224, 229
Nixon, K. C., 44, 72, 73, 83, 99, 104, 108, 123, 131, 152, 154, 157, 163, 170, 200, 238, 250

O'Grady, R. T., 67
Ogden, T. H., 170
Oosterbroek, P., 57
Owen, R., 92

Page, R. D. M., 154, 218, 220, 222, 225, 228, 229
Panchen, A. L., 30
Patterson, C., 47, 52, 55, 79, 91, 92, 94, 108, 195
Penz, C. M., 233
Pickett, K. M., 138
Piel, W. H., 28
Pimentel, R. A., 57, 63, 67, 69
Platnick, N. I., 8, 26, 33, 45, 46, 47, 57, 66, 100, 133, 134, 151, 155, 156, 193, 203, 209, 214, 217, 218, 220, 222, 223, 224, 229, 247
Pleijel, F., 60, 63
Polhemus, D. A., 154, 158, 166, 224
Popper, K., 33, 35, 36, 48
Posada, D., 107, 137
Prendini, L., 83, 245
Pulawski, W. J., 203

Raven, P. H., 51, 53
Remane, A., 52
Rieppel, O. C., 33, 37, 41, 48, 52, 56, 58, 84, 91, 92, 108, 157, 160, 200
Ripplinger, J., 137
Rohlf, F. J., 154, 158
Rokas, A., 158
Romer, A. S., 28
Ronquist, F., 225, 226
Rose, M. R., 242
Rosen, D. E., 103, 195, 214, 217, 229
Ross, H. H., 18, 19, 23
Rowe, T., 32, 199

Saitou, N., 131
Sanderson, M. J., 164
Sankoff, D., 113
Sanmartin, I., 225, 226, 229
Sarich V. M., 81
Schawaroch, V., 57, 91, 94
Schoch, R. M., 30, 100
Schuh, R. T., 154, 158, 161, 166, 200, 204, 206, 220, 223, 224, 230, 238, 240, 244, 248
Schulmeister, S., 170
Sclater, P. L., 212
Sharkey, M. J., 126
Sherborne, C. D., 201
Sibley, C. G., 25, 247
Siddall, M. E., 48, 137, 140, 142, 167, 168
Simmons, M. P., 138
Simonsen, T. J., 185
Simpson, G. G., 5, 6, 17, 18, 19, 97
Slater, J. A., 248
Slowinski, J. B., 76
Smith, V. S., 229
Sober, E. R., 41, 135, 161
Sokal, R. R., 7, 65, 110, 154
Soltis, D. E., 13, 130, 132, 161
Sorensen, J. T., 125
Sperling, F. A. H., 245
Stamatakis, A., 136
Stamos, D. N., 38
Standley, P. C., 21
Stearn, W. T., 208
Steel, M., 136, 137, 138
Stonedahl, G. M., 21, 24, 220, 223, 224
Strickland, H. E., 176, 181

Suzuki, Y., 138
Swofford, D. L., 41, 65, 111, 113, 122, 123, 131, 135, 136, 138, 139, 140, 143, 145, 160, 238
Szumik, C., 218

Tajima, F., 162
Templeton, A. R., 107
Thiele, K., 81
Thorpe, R. S., 81
Trueman, J. W. H., 41, 169, 234
Tuffley C., 136, 137
Turner, J. R. G., 197
Tuxen, S. L., 54

Vane-Wright, R. I., 250
Varón, A., 79
Viloria, A. L., 248
Vogt, L., 41
Von Baer, K., 101
Vrana, P., 72, 163

Wahlberg N., 57
Wallace, A. R., 210, 212
Wanntorp, H.-E., 13, 240
Watrous, L. E., 99
Wägele, J.-W., 30
Wegener, A., 210
Weingartner, E., 233
Wenzel, J. W., 56, 104, 137, 230, 234, 236, 241
Weston, P. H., 103, 108, 213, 214
Wheeler, Q. D., 22, 45, 76, 99, 103, 200, 245, 250
Wheeler, W. C., 72, 77, 79, 94, 105, 117, 132, 133, 141, 160, 161, 163, 170
Whiting, M. F., 57, 140, 141, 142, 170, 234
Wielgorskaya, T., 25
Wiens, J. J., 72, 161
Wiley, E. O., 30, 41, 48, 106, 193, 195, 208, 220
Wilkinson, M., 63, 72, 164
Will, K. W., 245
Williams, D. M., 30, 134
Williams, P. H., 251
Willis, J. C., 25
Wilson, D. E., 25
Wilson, R. A., 22
Wimberger, P. H., 234
Winkworth, R. C., 226
Winsor, M. P., 45
Winston, J. E., 30
Wood, D. M., 57
Wygodzinsky, P., 101, 102

Yang, Z., 135, 144
Yeates, D. K., 83

Zandee, M., 220
Zelditch M. L., 81
Zhou, B. B., 138
Zimmerman, E. C., 248
Zimmermann, W., 8
Zrzavý, J., 241

SUBJECT INDEX

Note: Italicized page numbers refer to terms in the glossary.

a posteriori character weighting, 126
a priori character weighting, 125
absence, of a character, 90
absolute falsification, 39
abstracting sources, 28
ACCTRAN, 86, 87, 111, 238, *257*
Adams compromise, 228
Adams compromise technique, 154
Adanson, Michel, 7
adaptation, 93
  testing hypotheses of, 239, 241
  theories of, 231
addition sequence, of taxa, 119
additive binary coding, 67, 68, 69, 220, *257*
additive character (Farris transformation), 111, *257, 262*
additive coding, 112
additivity, 69
ad hoc assumptions, 36
ad hoc hypotheses, 40, *257*
  in biogeography, 216
  minimizing, 110
adjacency, of character states, 65, *257*
advanced character, *257*
Agassiz, Louis, 211
age
  of a taxon, 105
  of sister groups, 107
aggregator, web, 203
Akaike Information Criterion, 136
algorithm, for phylogenetic analysis, *257*
algorithms
  branch-and-bound, 122
  exact-solution, 122
  implicit-enumeration, 122
  phenetic, 8
  phylogenetic, 110
alignment
  by eye, 75
  direct, 254
  of DNA sequences, 74, 170, 253, *257*
allometric growth, of antlers, 240
allopatric speciation, 217, 225, *257*
allozyme, *258*
allozyme data, 79
allozyme polymorphisms, 80
anagenesis, *258*
analogy, 80
ancestor, 95, 105, *258*
ancestor-descendant relationships, 41, 106
ancestors, identification of, 107
ancestral character, 11, 238
ancestral polymorphism, 162, *258*
ancestral species, 38
Angiosperm Phylogeny Group, 14
Angiospermae, 16
Antliophora, 142
apomorphic, *258*
apomorphic characters, 89
apomorphy, 91, *258*
Apterygota, 189, 191
Archaeopteryx lithographica, 105
Archosauria, 15
area cladogram, 216, 217, 220, *258*
area cladograms, combining, 218
area of endemism, 217, *258*
areas of endemism
  determining, 219
  recognition of, 218
  size in Southern Hemisphere, 248
Aristotle, 3, 199
articles, in zoological code, 178
Ashlock, Peter, 97
Assumption 0, 220, 221
Assumption 1, 220, 221
Assumption 2, 220, 221, 222
assumptions, biogeographic, 219
Asteraceae, 232

asymmetrical branching, of a cladogram, 155
asymmetrical classification, 234, *258*
asymmetrical costs, 114
Australia's Virtual Herbarium, 205
autapomorphy, 14, 58, 69, 71, 86, 113, 139, *258*
author, of a scientific name, 174
authority files, of names, 203
auxiliary principle, of Hennig, 92
availability, of names, 180, *258*
Aves, 15

Bacon, Francis, 33
Ball, George, 92
bar code
  as specimen label, 205, 206, *258*
  DNA, 245, *261*
Bayesian phylogenetic inference, 138
behavioral characters, congruence with morphology, 234
benefits, of deductive approach, 39
bifurcating trees, numbers of, 120
bilateral symmetry, 55, *258*
binary character, 59, 69, *258*
binomen, 174, *258*
binominal nomenclature, 174, *258*
biodiversity, 205, *258, 263*
  documentation of, 244
  phylogenetic aspect of, 246
biodiversity hot spots, 249
Biogenetic Law, 101, 103
biogeography, 209, *258*
  historical, 210, 247
Biological Abstracts, 28
BioSystematic Database of World Diptera, 203
biosystematics, 18
biotic regions, 212
bird pollination, 234, 237
BLAST, 76, 255
Blissidae, in South Africa, 248
bootstrap, 168, *258*
boreal megafaunal bias, 247
BPA, 220, 221
branch-and-bound algorithm, 122, *258*
branching character, 67, 68, *259*
branch support, 165, *258*
branch swapping, 119, 122, *258*
Bremer support, 165, *259*
Brooks Parsimony Analysis (BPA), 220, 221
Brundin, Lars Z., 13, 211, 214, 215
Bulletin of Zoological Nomenclature, 201
butterflies, undescribed diversity of, 244

Caesalpino, Andrea, 3
Cain, A. J., 7
Camin-Sokal optimization, 110, 114
Catalog of Sphecidae, 203
catalogs, systematic, 25, 26
center of origin, 100, 216, 217, *259*
Cervidae, 240
character, 56, 57, *259, 268*
  taxonomic, 23
character adjacencies, 103, 230
character coding, 57, 58, 63, 143, *259*
character coding, linear, 66
character compatibility, 126, *259*
character congruence, 69, 92, *260*
character data, synthesis of, 56
character independence, 69–70, 75, 161, *263*
character polarity, determination of, 97, 100, 101, 103, *266*
character randomization tests, 169
character reversal, 64
character state, 57, 58, *259, 268*
character theories, 59
character weighting, 151
  a priori, 125
  differential, 124
  objective, 126
  subjective, 125
characters
  branching, 66
  complex, 37
  description of, 82
  goodness of, 126
  linear, 66
  simple, 37
  unweighted, 124
character-state adjacency, 65
character-state assignment, 238
character-state identity, 57, *259*
character-state transformation, 11, 46, 62, 97, 110, *259*
  differential weighting of, 65
  observation of, 67
character-state tree, 65, 67, *259*
checking and rechecking, of characters, 36, 62
checklists, 25
Chironomidae, 215
chorological progression, 100, *259*
Chrysomelidae, 227
CI, 146
ci, computation of, 146
CIPRES, 255
circumscription, of groups, 14, 180, 185, 198, 199, *259*
clade, 9
clade concordance index, *259*
cladist, 9, 11, *259*
cladistic biogeography, 215
  criticisms of, 224
cladistic classifications, 14, 190
cladistics, 8, 9, 17, 48, 253, 254, *259*
Cladistics (journal publication), 27
cladogenesis, *259*
cladogram, 9, 10, 12, 98, 106, 114, 253, *259, 265, 268, 269*

cladogram manipulation, 254
cladogram, resolution of branching, 149
cladograms
  as formal classifications, 193
  multiple equally-parsimonious, 151
  shape of, 155
classes, taxa as, 45
classification, 4, 5, 6, 15, 16, 17, 18, 185, 191, 192, 193, 203, *259*
  art of, 8
  asymmetrical, *258*
  evolutionary taxonomic, 15
  general purpose, 7
  hierarchic, 173
  methodology of, 6
  natural, 7, 45, 46, 87
  numbered, 192
  numerological, 176
  phenetic, 15
  special purpose, 7
  traditional, 16
classifications, arguments against cladistic, 190
clique, 150, *259*
clique analysis, 109, 150
clocklike divergence, 81
CLUSTAL, 76, 255
clustering-level distance, 116, 191, *259*
codes of nomenclature, 175, 182, 200
coding, *266*
coding methods, assumptions of, 64
codivergence, 209, *259*
coevolution, 73, 227, 230, *259*
collections
  examination of, 83
  as systematic resource, 29
Colless, Donald, 7
colonization, of areas, 226
combinable components technique, 154, 164
combined analysis, 157, *259*
common equals primitive criterion, 100, 107
common plan, 47, 52
comparative method, 231
compatibility, *259*
compatibility analysis, 126, 150, *260*
complementarity, 54
complex characters, 100
component, 152, *260*
  on an area cladogram, 216, 219
composite coding, 63, *260*
compromise techniques, 153, 154
compromise tree, 152, *260*
concave weighting function, 128
concordance, 37, 62, 148, 150, *260*
congruence, 36, 37, 56, 59, 92, 150, 158, 163, *260*
  of characters, 40, 63, 90, 126
  taxonomic, 159
  topological, 164
Coniferales, 16
conjunction, of characters, 55, *260*
connection by intermediate forms, 52, 60
consensus, 17, 131, 158, *260*
  arguments for, 160
  resolution of, 154
consensus techniques, 152, 153
  in biogeography, 222
  in host-parasite analysis, 227
consensus tree, 152, *260*
conservation, 249
  of names, 198
consilience, 37, 150, *260*
consilience of inductions, 73
consistency, 37, *260*
  of characters, 127, *260*
  statistical, 139, *260*
consistency index (ci), 37, 69, 128, 129, 146, *260*
  ensemble (CI), 130, *261*
  minimum value, 148
  sum of average unit, 129
consistency indices, computing, 147
constant of concavity, 129, 130
continental drift, 210, 211, 214
continuous variables, 81
contracting earth theory, 211
convergence, 36, 92, 93, 126, *260*
  a priori assumption, 163
convergent evolution, 93
Copernicus, 32
correct topology, 143
correlation of characters, 90
corroboration, 34, 35, *260*
  of hypotheses, 36, 169, 232
cospeciation, 73, 209, *260*
cost
  in biogeographic analyses, 225
  of a character transformation, 65, 110, *260*
Crocodilia, 15
Croizat, Leon, 212
crown group, 106, 195, *260*
Curculionidae, of Australia, 248
cutoff value, of jackknife, 167
Cycadales, 16

Darlington, Philip J., 211
Darwin, Charles, 4, 6, 25, 90
data
  nomenclatural, 202
  specimen, 202, 205
  taxon-based, 202, 207
data decisiveness, 157
data matrix, 55, 66, 124, 253, *260*
data matrix preparation, 254
data partition, 70, 161, 165, *260*
database, systematic, 27, 202, 204, 251
date of publication, 175
de Pinna, Mario, 92

decay index, 165, *260*
deduced ground plan, 83
deduction, *260*
deductive approach, 33, 35, 39
definition, 45, 46, 48, *261*
  of a group, 87
  of a name, 199
  of species, 45
deletions, of nucleotides, 71, 75
DELTRAN, 86, 87, 112, 113, 238, *261*
dendrogram, 107, *261*
derived character, 11, 16, 59, 86, *261*
descent with modification, 44, 46, 96
description, taxonomic, 24, 180, *261*
diagnoses, efficiency of, 189
diagnosis, 23, 24, 199, *261*
dichotomous branching in cladograms, 38
dichotomy, *261*
Dicondylia, 189
Dicotyledoneae, 16
Dinosaurs, extinction of, 32
Diptera, 142
direct optimization, 94, 132, 170, *261*
  of DNA sequences, 79, *261*
DiscoverLife, 29, 207, 251
dispersal
  across hosts, 228
  in biogeography, 210, 217, *261*
dispersal-vicariance analysis, 225
distance, on a tree, *261*
distance data, 80
distance matrix, 11
distance methods, failure of, 114
distributional patterns, in Northern Hemisphere, 249
distributions, 215, *267*
  biotic, 210
  disjunct, 213
  Southern Hemisphere, 226
DIVA, 225
DNA bar code, 245, *261*
DNA sequence alignment, 78, 255
DNA sequence, character coding of, 64
DNA-DNA hybridization data, 80
Dollo theory, of characters, 111, 114
du Toit, Alexander, 211

Ectognatha, 189
Ehrlich, Paul., 7
empirical status, of systematics, 48
empirical testing, of a theory, 35
empiricists, extreme, 7
empty cells, in a matrix, 72
Encyclopedia of Life, 207, 245, 246
endemicity, 250
endemism, 217, *261*
ensemble consistency index (CI), 146, *261*
Entognatha, 189
EoL, 207, 245, 246
epistemology, 31, *261*
epithet, in nomenclature, 174
equal-weights assumption, in ML, 136
essence, 45, 47
essentialism, 6, 45, 199, *261*
Euclidean distance, 114, *261*
event-based methods, in biogeography, 225, *261*
evolution, 32
  of lineages, 9
evolutionary scenarios, 231
evolutionary taxonomy, 5, 6, 9, 14, *261*
evolutionary thinking, 40
evolutionary tree, 10, 12
exact solution, to a phylogenetic problem, 122, *261*
exemplar, 72, 83, *261*
exhaustive-search algorithms, 122
experiment, in science, 19
explanation, 48
  of character transformation, 52
  of data, 154
explanatory power, 40, 43, 91, 133, 156
extra steps, 148, 165
extrinsic data, 73, 230, *261*

fact, 31, 90, 191
Fahrenholz's Rule, 227
falsifiability, 34, 41
falsification, *262*
falsificationism, 39, 40
falsify, a theory, 34
family-group types, 181, 183
Farris optimization, 111, 112
Farris transformation, 111, *262*
Farris, James S., 111, 114, 208
fauna, 25
Felsenstein, Joseph, 58, 140
field guide, 25
finding optimal trees, strategies for, 124
Fish Net, 205
fit, 37, 62, 69, 110, 127, 146, 148, *262*
Fitch optimization, 111, 113
Fitch transformation, 61, 111, *262*
Fitch, Walter, 111
fittest trees, 128, 156, 254, *262*
fixation, of types, 181, 182
flora, 25
  of Australia, 248
  of North America, 248
  of South Africa, 248
fossil taxa, 5, 16, 193
fossils
  as ancestors, 105
  in character polarity, 100
  and cladistics, 106
  classification of, 193
  fragmentary, 195

as missing links, 52
as terminal taxa, 105, 194
frequency data, 79
fuse terminals, 72

gap, in DNA sequence data, 71, 75, *262*
gap coding, 81, 82, *262*
gap/change cost ratio, 77
gaps, insertion of, 77
GBIF, 27, 29, 203, 205, 251
GenBank, 82, 207
gender agreement, in nomenclature, 174, 197
gene trees, 143, 162, *262*
genealogical relationships, 8, 18, 193, 200
genealogy, 42, 96, *262*
storage of information on, 139
general area cladogram (GAC), 216, 217, 222, 225, *262*
general biology, 21
generalized parsimony, 66, 113
generalized time-reversible model, 65
genus-group types, 181, 182
Geoffroy St. Hilaire, Etienne, 52
geological scenarios, 226
geology, 5, 211
historical, 21
Geomyidae, 228
Gerridae, 233, 235
Ginkgoales, 16
Global Biodiversity Information Facility, 27, 29, 205
Gnetales, 16
Goloboff, Pablo, 128
gradist, 9, *262*
ground plan, 40, 72, 105, *262*
ground-plan taxon, 83
GUID, 203
Gymnospermae, 16

Halteria, 142
handbook, 25
Harrison, P. J., 7
Hebert, Paul, 244
Hemiptera, 93
Hennig, Willi, 8, 12, 13, 36, 38, 51, 53, 70, 73, 90, 92, 95, 107, 192, 195, 213, 227
HENNIG86, 254
herbaria, 29
HerpNet, 205
heterobathmy of synapomorphy, 90, *262*
heuristic phylogenetic solution, algorithms, 122, *262*
hierarchical discordance, 61, *262*
hierarchy, 4, 15, 18, 57
bifurcating, 149, 177, 191
of character distributions, 90
discovery of, 46
Linnaean, 187
of life, 176
of relationships, 87
systematic, 21
historical linguistics, 9
Holometabola, 140
holomorph, *262*
holophyletic, 262
holophyly, *262*
holotype, 182, *262*
homogeny, 91, 92
homologous taxa, 227
homology, 52, 53, 80, 81, 87, 91, 92, 230, *262*
of DNA sequences, 75, 77, 82, 93
evidence for, 52
hypothesis of, 85
homology analysis, 60, 62
homonomy, 55, 94, *262*
homonym
junior, 183
primary, 183
secondary, 183
homonymy, 183, *262*
homoplasy, 39, 59, 63, 71, 86, 91, 92, 93, 112, 113, 151, 156, *262*
degree of, 146
downweighting, 130
Hooker, Joseph Dalton, 25, 210, 214
horizontal gene transfer, 126, 162, *262*
host associations, 73, 204, 230, 238
optimization of, 240
host switching, in Papilionidae, 232
hot spot, 249, *263*
hydrid origin, areas of, 224
Hymenoptera Names Server, 203
hypotheses, 22, 31, 42
boldness of character, 61
of ancestry, 53
hypothesis, 31, 32, 35, 222
hypothetical ancestor, 85, 86, *263*
hypothetical taxonomic unit (HTU), 105, *263*

ICZN, 178
identification, 18, 19, *263*
identification keys, interactive, 245
ILD, 169
implicit enumeration algorithms, 122
implied weighting, of characters, 128, 254, *263*
inapplicable data, 71, 72, *263*
INBio, 205
incertae sedis, 195, *263*
incongruence, 92, 165, *263*
incongruence length difference (ILD), 133, 169, *263*
inconsistency, statistical, 43, 139, *263*
indel, 75, *263*
independence, 70, 161, *263*
of patterns, 47

independent allele model, 80
Index Animalium, 201
Index Herbariorum, 29
Index Kewensis, 25, 201
Index of Organism Names, 201
indexing sources, 27
individuals, taxa as, 45
induction, 33, *263*
information content
  of classifications, 155, 193
  of data, 152
ingroup, 57
inheritance, mechanisms of, 51
Insecta, 89, 184, 186, 189, 192
insertion of gaps, 78
insertions, of nucleotides, 75
instrumentalism, cladistic, 160
integral surrogacy, 251
intercontinental connection, southern, 211
internal rooting, of a character, 67, *263*
International Botanical Congress, 178
International Code of Botanical Nomenclature, 178
International Code of Nomenclature for Cultivated Plants, 175
International Code of Nomenclature of Bacteria, 175
International Code of Zoological Nomenclature, 178
International Commission on Zoological Nomenclature, 201
International Plant Names Index, 25, 202
Internet, 252
Internet resources, 28
intrinsic data, 73, *263*
introgression, 162, *263*
invalid name, 181, 184, *263*
IPNI, 202
irreversibility, of characters, 111
islands, of trees, 130, 132
isomorphy, of classifications, 188, *263*
isotype, 182
ITIS, 28, 203

jackknife, 167, *263*
jackknife resampling, 130, 131
jackknife values, 165
journals, in systematics, 27
junior homonym, 183
junior synonym, 180, 184

Kew Record of Taxonomic Literature, 25
key, dichotomous, 20–21
Kimura two-parameter model, 65
knowledge
  application of, 19
  objective, 31
  scientific, 31, 33, 43

labels, bar-code, 205
land bridges, 210
Lankester, E. R., 92
large data sets, 122
Latin, 3, 174, 208
laws of inheritance, 74
LBA, 139
lectotype, 182, *263*
legumes, 234
length, of a tree, 87, 119, *263*
length-variable sequences, 76, 132
level of generality, of a character, 100
levels, of grouping, 57, 70, 87, 90, 185, 190, 191
life-history strategies, adaptive consequences, 232
likelihood approaches, in biogeography, 226
limbs, of Tetrapoda, 87
lineage, *264*
  evolutionary, 9
linear character, *264*
Linnaean hierarchy, 6, 173, 185, 186, *264*
  criticisms of, 197
Linnaeus, Carolus, 3, 4, 173, 243
Lipscomb, Diana, 92
local optimum, in phylogenetic computation, 130
logical consistency, 35
logical form, of a theory, 35
long-branch attraction, 139, 142, 143, *264*
loss character, 63, 90
LSID, 203

Machilida, 189
MACLADE, 255
majority rule compromise technique, 154
MALIGN, 77, 255
Mammalia, 15
Manhattan distance, 115, *264*
MANIS, 205
mapping
  of characters, 87, 232, *264*
  of distributions, 252
  on environmental variables, 252
mass homology, 94
matrix, 69, *264*
  of characters, 10
  information in, 69
  of distances, 8, 10
Matthew, William Diller, 211
maximal clique, 150
maximum likelihood, 42, 43, 65, 135, 168, 254, *264*
  appeal of, 135
  assumptions of, 136
  calculation of trees, 135
  criticisms of, 137, 144
Mayr, Ernst, 5, 6, 7, 53, 90, 92, 97
measurement data, 81
meristic data, 81, *264*

MESQUITE, 255
metaphysics, *264*
meta-retention index, 133
metric, 81, 115, *264*
metricity, 81
Mickevich, Mary, 158
minimum spanning tree, 107, *264*
Mirbelieae, 234, 237
Miridae, 93, 204, 238
  species diversity, 244
missing areas, 219
missing data, 71–73, 124
missing taxon, on an area cladogram, 216, *264*
mixed coding, 69
ML, 135
models
  of character evolution, 41, 43
  of sequence evolution, 136
molecular data, 17, *264*
  superiority of, 125
molecular partition result, 164
Monocotyledoneae, 16
monograph, 25
monophyletic group, 22, 90, 95, 96, *264*
monophyly, 51, 70
  of terminals, 71
  usages of, 97
monotypy, fixation by, 182
morphocline analysis, 61, *264*
morphometrics, 81, 82
mosaic evolution, 90, *264*
most parsimonious tree (MPT), 109, 127, *264*
most parsimonious trees, selecting among, 156
MRI, 133
multiple-sequence alignment, 77
multistate character, 60, 61, 63, *264*
multistate coding, advantages of, 64
MUSCLE, 255

names
  family-group, 178
  genus-group, 179
  species-group, 179
  suprafamilial, 178
National Center for Biotechnology Information, 28, 77, 207
natural group, 95, *264*
natural hierarchy, 18
Natural System, 177
NCBI, 28
neighbor joining, 131, 168, *264*
Nelson, Gareth, 13, 101
Nelson compromise technique, 154
Nemcia, 234, 237
neotype, 182, *264*
nest architecture, 234, 236
nesting, of characters, 87, 155, *264*
network, unrooted, 97, 98, 107, 119, *265*
no common mechanisms assumption, in ML, 136
node, in a cladogram, 38, *265*
Nomenclator Zoologicus, 201
nomenclature
  binominal, 174, *258*
  biological, 27, 173, 178
  phylogenetic, 199, *266*
  uninominal, 199
NONA, 254
non-additive character (Fitch transformation), 61, 111, *265*
non-additive coding, 113
non-protein coding genes, 75
nonredundant linear coding, 67, 68, 69, *265*
numerical cladistics, 119
numerical taxonomy, 7, 9, *265*

objective character weighting, *265*
objective synonym, 185
Occam, William of, 36
ontogenetic data, in character polarity, 101
ontogenetic transformation, 51
ontogeny, 44, 103, *265*
ontology, *265*
operational taxonomic unit (OTU), 22, *265*
Ophraella, 232
optimal tree, 42, 123
optimal trees, finding, 119
optimality criterion, 40, 110, 114, 119, 136, 138, 144, *265*
  absence of, 127
optimization, 87, 110, 225, 234, 237, 238, *265*
optimization alignment, 77, 132
ordered character, 65, *265*
ordered transformation, 86
ordinal character, *265*
ordinal subset, 69
ordinal-additive binary coding, 69
Origin of Species, 177
original designation, fixation by, 182
orthology, of genes, 55, 95, *265*
OTU, 22, *265*
outgroup, 10, 57, 66, 98, *265*
outgroup comparison, rooting by, 99
outgroup selection, 99, 104
outgroups
  and DNA sequence data, 105
  using multiple, 99
overall similarity, 7, 12, 17, 193, *265*
Owen, Richard, 52, 92, 211

Pachynomidae, 102
paleontological approach, 105
panbiogeography, 212, 224
Papilionidae, 232
parallel evolution, 93, 126
parallelism, 92
paralogous distributions, 216, 223

paralogous gene families, 162
paralogy, 55, 94, 222, *265*
paraphyletic group, 95, 96, 97, *265*
paratype, 182
parenthetical notation, 117, 118, 133, *265*
parsimony, 36, 37, 40, 41, 110, 111, *266*
  assumptions of, 41
  criticisms of, 139
  different kinds of, 65
  in evolution, 41
  generalized, 65
parsimony-based alignment, 76
parsimony-based software, 253
parsimony ratchet, 123, 131
partitioned branch support, 165, *266*
path-length distance, 114, 115, 139, 191, *266*
pattern cladist, 46, 47
patterns, 48, 217
  biogeographic, 209
  hierarchic, 46
Patterson, Colin, 92
PAUP*, 136, 254
PBI, 245
pectinate classification, 191, *266*
PEE-WEE, 254
permutation tail probability, 169, 226
pheneticist, 9, 11, *266*
phenetics, 7, 9, 14, *266*
phenogram, 9, 10, 12, *266*
philosophy of science, 32
Phthiraptera, 228
Phyllobrotica, 227
Phylocode, 176, 200
phylogenesis, 44
phylogenetic algorithms, 119
phylogenetic diversity, 248, 250
phylogenetic hypothesis, *266*
phylogenetic inference, 44
phylogenetic nomenclature, 199, *266*
phylogenetic patterns, 58
phylogenetic signal, from combined data, 161
phylogenetic systematics, 8, 13, 38, *266*
phylogenetic taxonomy, 45, 199
phylogenetic uniqueness, 250
phylogeny, 5, 44, *266*
phylogeography, 107
phylogram, *266*
PhyML, 136
phytophagous insects, 74, 230, 238
Pilophorini, 248
Planetary Biodiversity Inventories, 205, 244, 245
plasticity, of characters, 93
Platnick, Norman, 156
plesiomorphic characters, 89, *266*
plesiomorphy, *266*
pocket gophers, 228
polarity, of characters, 10, 97, 133, *266*
Polistinae, 104, 234, 236
pollination, 237
polymorphic terminal taxa, 73
polyphyletic group, 73, 95, 96, *266*
polytomy, 38, 195, *266*
Popper, Karl, 33, 34, 38
Popperian approach, 39
positivism, 33, 38, *266*
POY, 79, 132, 254
prediction, 34, 40, 193, *266*
presence-absence coding, of a character, 59, 62, *266*
primary homology, of DNA sequences, 79
primary homonym, 183
primitive, *266*
priority
  in nomenclature, 183, 201, *267*
  principle of, 175, 179
progression rule, 100, 213, 214, 217, *267*
progressive-alignment algorithm, 76
Proteaceae, 213
protein-coding gene regions, 75
pseudoreplicate, of data matrix, 165, 168
PTP, 169, 226
publication of names, 180
punctuated equilibrium, 52

Quinarian System, 176

R software package, 256
radial symmetry, 55, *267*
radiating lineages, protection of, 250
rank, 12, 187
  in nomenclature, 188
ranking, of groups, 14, *267*
Ratchet, 131
rate of change, 11, 43, *264*
rates of substitution, 142
rates, evolutionary, 8, 10, 42
ratios, as characters, 82
RAxML, 136
Ray, John, 3
rci, 148
reading frame, 75
reciprocal illumination, 74, *267*
recommendations, in zoological code, 178
reductionist coding, 63, *267*
redundant distributions, 222, 227, *267*
redundant taxa, 124
Reduviidae, 102
Reichenbach, Hans, 33
relational database, 203, 204, 206
Remane, A., 52, 54
Reptilia, 14, 15, 87
resampling with replacement, 168
rescaled consistency index (rc), minimum value, 148
retention index (ri), 113, 148, 149, *267*
Reuter, O. M., 93

revision, systematic, 24, 25
ri, computation of, 148
ribosomal RNA genes, 76
robustness, *267*
  of clades, 170
  of systematic methods, 43
Rohlf, F. J., 7
root, 10, 85, 86, 97, 98, *267*
  of a name, 183
rooting, of trees, 133, *267*

Sankoff optimization, 113, 114
Sauria, 15
SAW, 127, 156
scattering, on a cladogram, 59, 61, *267*
scenarios, 41, 107, 231, 238, *267*
schools, of taxonomy, 12, 15, 17
science, normal, 31
scientific names, 174
Sclater, Philip, 212
secondary homonym, 183
sectorial search, 123, *267*
seed plants, 89, 98
self-consistent tree, 128
self-contradictory tree, 128
senior synonym, 184
sensitivity analysis, 170, *267*
  using POY, 132
sequence evolution, models of, 77
sequencing
  in classification, 193, *267*
  DNA, 125, *267*
serial homology, 55, 94, *267*
shared allele model, 80
shared derived character, 51, 87
shortest tree, 110
significance test, in biogeography, 226
similarity, 6, 7, 12, 17, 53, 85, 92
  detection of, 54
  lower level, 91
  non-homologous, 61
  of position, 52, 55
  of structure, 52, 55, 60
  storage of information on, 139
  tests of, 55
similarity-based alignment, 76
Simpson, George Gaylord, 5, 6, 17, 97, 211
simultaneous analysis, 72, 157, 159, 161, 165, 232, *267*
singular statement, 34
sister group, 107, *267*
sister group relationships, depiction of, 155
sister groups, ages of, 107
snakes, absence of legs in, 62, 63, 91
Sneath, Peter, 7
social behavior of wasps, optimizing, 238
software listings, 255
Sokal, Robert, 7
southern continents, 211, 214
special pleading, 36
special similarity, 8, 9, 14, 17, *267*
species, 4, 44, *267*
  discrimination of, 5
  names of, 174
Species 2000, 28, 203
species concepts, 22
species diversity, 243
species pages, 207, 246
Species Plantarum, 173
species richness, 251
species tree, 143, 162, *267*
species-group types, 181
specimens, 29, 202
  search for, 83
  selection of, 82
  typical, 181
speciose lineages, protection of, 250
Spermatophyta, 16, 98
Squamata, 15
stabilist view, of biogeography, 210
stability, 168, *268*
  measures of, 164
  in nomenclature, 173, 178, 191, 200, *268*
state, of a character, 11, 57, 114, *268*
statistical approach, to systematics, 17, 43
statistical inconsistency, 139
Steiner trees, 106
stem group, 106, 195, *268*
stemmatics, 9
step matrix, 113
steps
  on a cladogram, 60, 65, 110, *268*
  maximum possible, 148
stepwise decisions approach, to character coding, 63
stop codon, 75
storing trees, 117
Strepsiptera, 140
Strickland, Hugh Edwin, 175, 178
Stricklandian Code, 178
strict consensus, 152, 154
structural identities, 47
structural similarities, 47
subjective character weighting, 125, *268*
subjective synonym, 185
subordination
  of characters, 37
  in classifications, 193, *268*
subsequent designation, fixation by, 182
subtree analysis, in biogeography, 222, 223, *268*
subtree pruning-regrafting, 123
successive approximations weighting, 127, 156, *268*
supertree, 164
support, measures of, 164
surrogacy, in conservation, 250, *268*

swamping, 158, 161
symmetrical, 65
symmetrical branching, of a cladogram, 155
symmetrical character-state transformation, 65
symmetrical classification, 177, 191, *268*
symmetrical costs, 114
symplesiomorphy, 86, *268*
synapomorphy, 14, 51, 86, 87, 91, 92, 95, *262, 268*
  grouping by, 193
  measures of, 148
  tests of, 92
syncretist, 9, *268*
synonym
  junior, 184
  objective, 185
  senior, 184
  subjective, 185
synonymy, 83, 180, 184, *268*
syntype, 182, *268*
Systema Naturae, 173, 186
Systematic Biology (journal publication), 27
Systematic Botany (journal publication), 27
Systematic Catalog of Plant Bugs, 204
systematic literature, 23
systematic theories, 58
Systematic Zoology (journal publication), 13, 27
systematics, 5, 17, 21, 32, 48, 253, *268*
  activities of, 4
  completeness of, 47
  independence of, 47
  tasks of, 8
Systematics, New, 5

taxa, 16, 21, 69, 85, 115, 122, 157, 176, 195, 207, 215, 220, *268, 269*
  as individuals, 45
  primitive, 11
  selection of, 82
taxon, 21
Taxon (journal publication), 27, 178
taxon names, definition of, 45
taxon-addition sequence, random, 122
taxon-area cladogram, 216, 217, 223, *268*
taxonomic congruence, 154, 157, 159, *268*
taxonomy, 3, 4, *268*
  aims of, 6
  operationalizing of, 8
  quantitative, 7
term, on an area cladogram, 36, 216, *269*
terminal taxon, 22, 59, 83, *269*
terminology, 92
test
  of a character hypothesis, 63
  of homology, 91
  of ingroup monophyly, 99
  of a systematic hypothesis, 37, 53, *269*
  of a theory, 34
tests, of synapomorphy, 88, 92
Testudines, 15
Tetrapoda, 88, 98
textual criticism, 9
theories, 31, 56
  choice of, 43
  of homology, 92
theory, 31, 32
  of common descent, 6
  of continental permanence, 211
  of evolution, 4, 46
  taxonomic, 5
theory laden, 33, 59
Theropoda, 32
three-area statements, 223
three-taxon statements, 133, 134, *269*
TNT, 82, 123, 253
tokogenetic relationships, 162–163, *269*
topology, 10, 87, *269*
topology dependence, of models, 137
topology dependent permutation tail probability, 169
total evidence, 157, 158, 159, 161, 164, *269*
  arguments against, 160
total fit, 128
T-PTP, 169
track analysis, 212
transformation, accelerated, 87
transformation, delayed, 87
transformation, of a character, 90, 238
transformation costs, symmetric, 111
transformation series, 60, 61, 87, 148, *269*
transformation series analysis, 60, 62
transition, 75, 132, *269*
transition events, in biogeography, 225
transitive surrogacy, 250
transversion, 132, *269*
tree, 69, 130, 131, *269*
tree bisection-reconnection, 123
tree drifting, 123, *269*
tree fitting, 225
tree fusing, 123, *269*
Tree of Life, 28, 207, 246
tree space, 132, *269*
tree thinking, 93
TreeBase, 28
TREEFINDER, 136
trees, 51, 106, 131, 154, 254
  islands of, 130
  numbers of, 120
triangle inequality, 81, 115, 117, *269*
trichobothria, 101, 102
trichotomy, 38, *269*
true phylogeny, knowledge of, 160, 162
truth, in science, 31, 34, 35, 42, 48
tuatara, 250
two-state character, 59, 112, *269*
types
  nomenclatural, 181, 198
  primary, 182
typification, of names, 181, 198

UBio, 28, 203
ultrametric, 81, 115, 116, 191, *269*
uncertain position, taxa of, 193
uninominal nomenclature, 199
universal laws, 40
universal statements, 34
unordered character, 61, *269*
unrooted trees, 119
UPGMA, 8

valid name, 183, *269*
validity, of names, 181
variable, in a data matrix, 58, 68, *269*
variation
  between-group, 162
  within-group, 162
Venn diagram, 117
vicariance, 213, *269*
vicariance signal, 226

Wagner algorithm, 97, 119, 122, *269*
Wagner, Warren H., 111
Wallace, Alfred Russel, 4, 210
waratahs, 214
Web of Knowledge, 28
web-based software, 255
Wegener, Alfred, 210
weighting
  a posteriori, 126
  a priori, 125
  differential, 124
weighting of character state transformations, 65, *269*
weighting functions, 129
widespread taxon, 216, 220, *269*
WINCLADA, 254
wing polymorphism, 233, 235
wings, in Tetrapoda, 87
World Spider Catalog, 203
Wygodzinsky, Pedro, 13, 102

X-coding, 73

ZooBank, 203
Zoological Record, 27, 28, 201